34LYN586

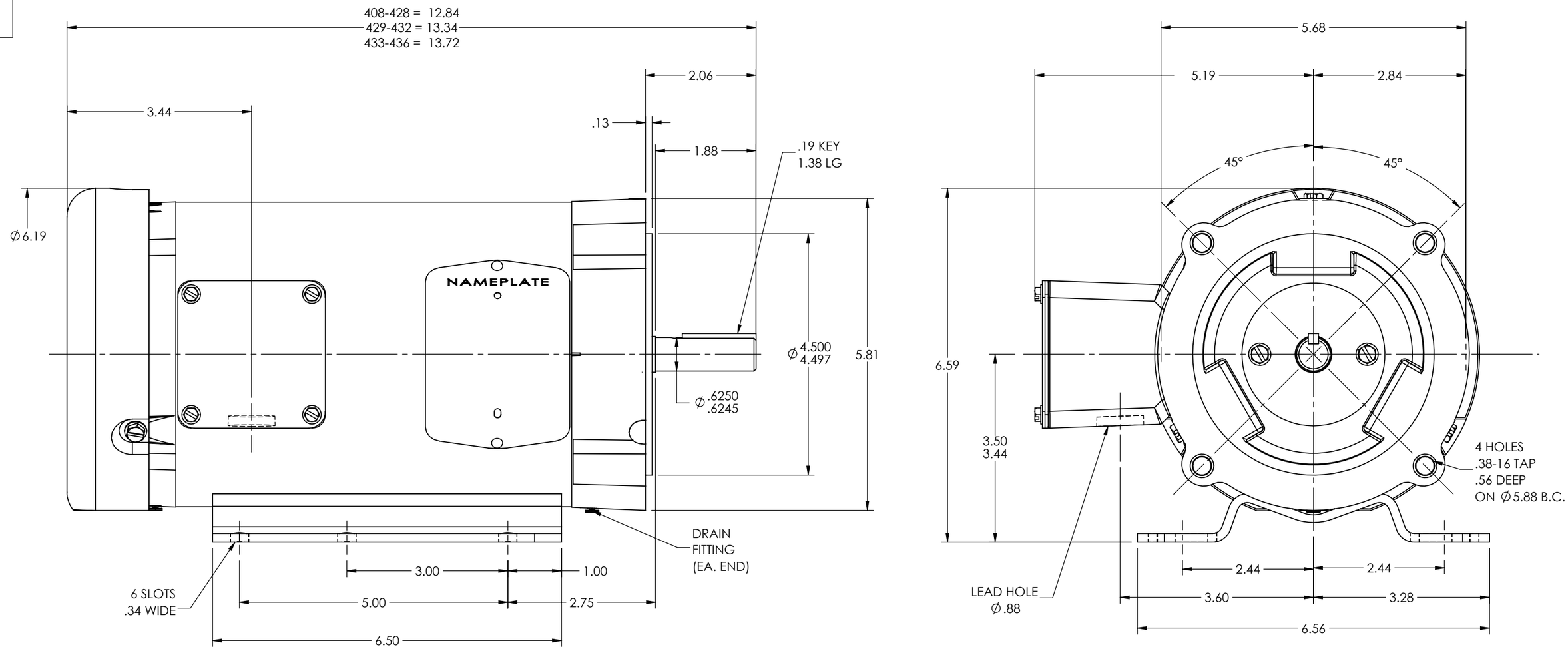

CUSTOMER IS RESPONSIBLE FOR DETERMINING THAT THE PRODUCT WILL PERFORM SUITABLY IN THE INTENDED APPLICATION

REV. DESC: NEW			
REV: -	VERSION: 00	REVISED: 01:16:18 03/05/2024	TDR: 000001227262
MODEL NO. 34LYN586			REF: -
BY: USALMAZ			B

BALDOR - RELIANCE®

STD HORZ 34M NEMA 56HC TEFC W DRAINS (IP54)

34LYN586