10LY-000-121

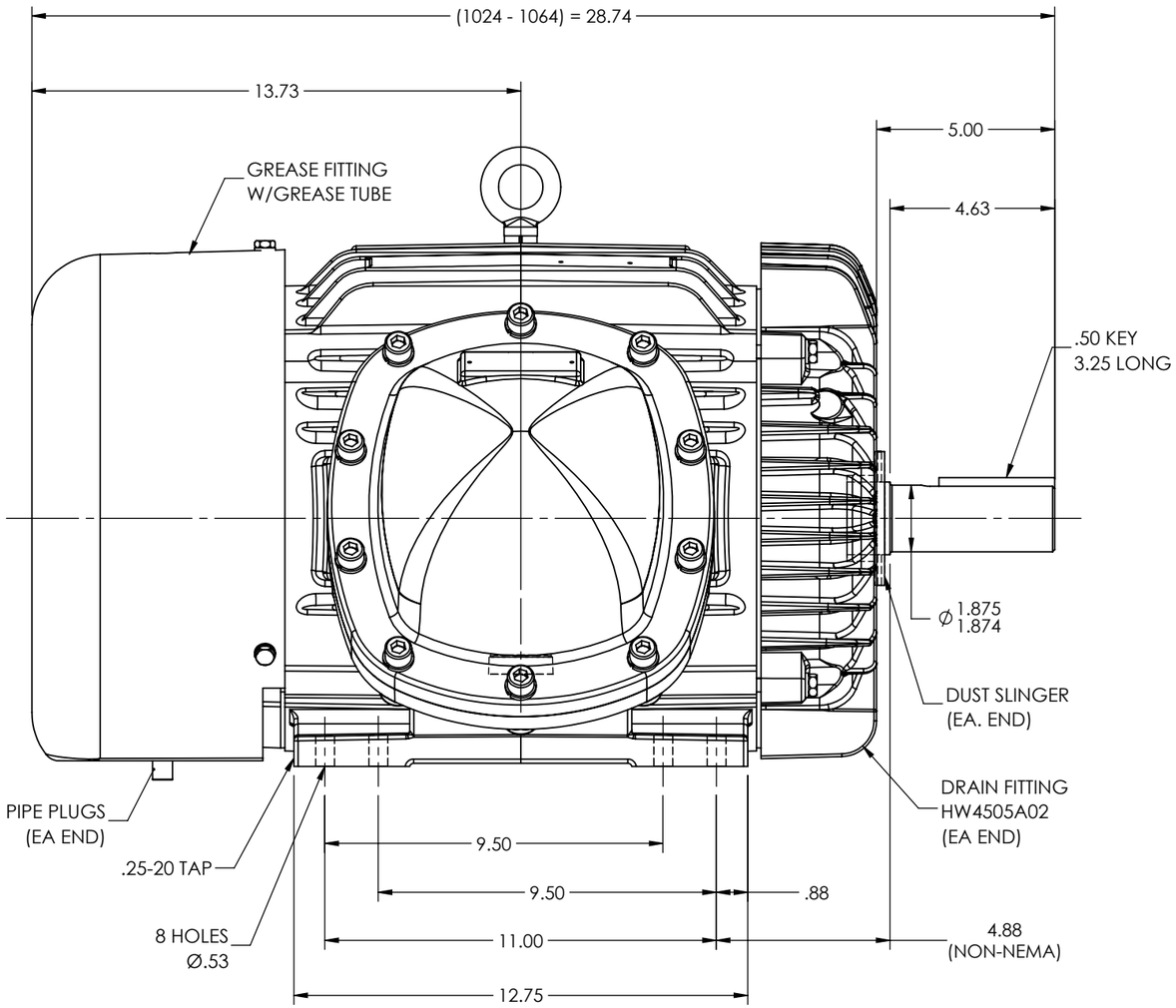

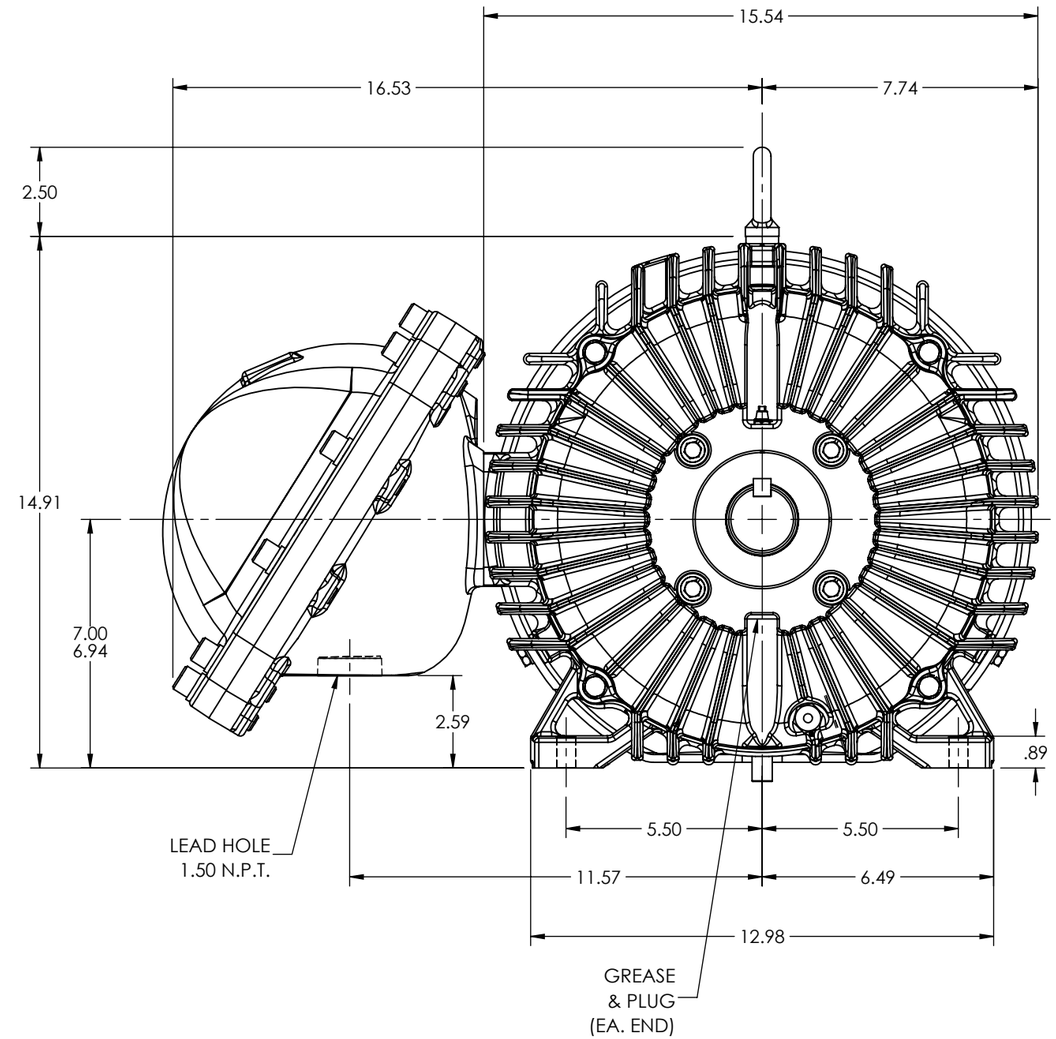

CUSTOMER IS RESPONSIBLE FOR DETERMINING THAT THE PRODUCT WILL PERFORM SUITABLY IN THE INTENDED APPLICATION

REV. DESC: LOAD MARKING FILE FOR STOCK PRODUCTS			
REV: A	VERSION: 01	REVISED: 10:44:13 06/29/2023	TDR: 000001211833
MODEL NO. 10LY-000-121			REF: -
BY: ENALEM0			B

BALDOR - RELIANCE®

HORZ XPFC 284-6TY CL.I GP.C&D, CL.II GP.E,F&G & CP FEAT'S

10LY-000-121