34LY5331

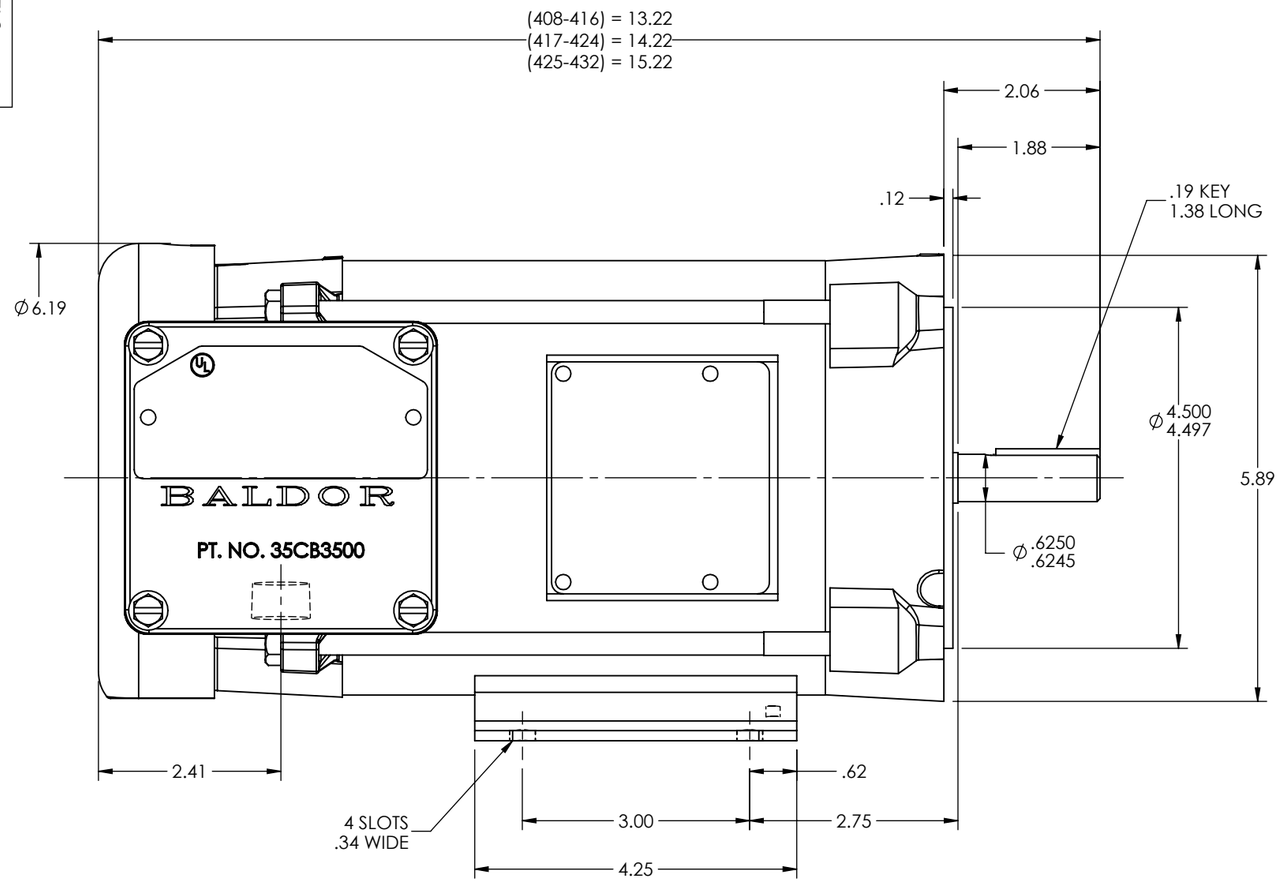

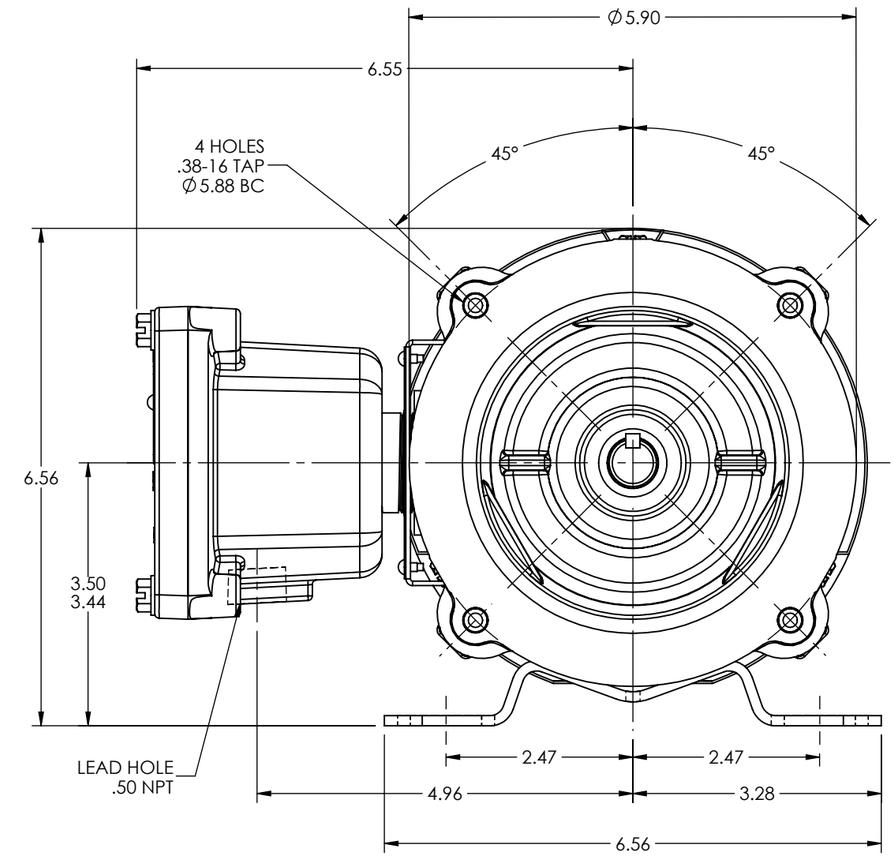

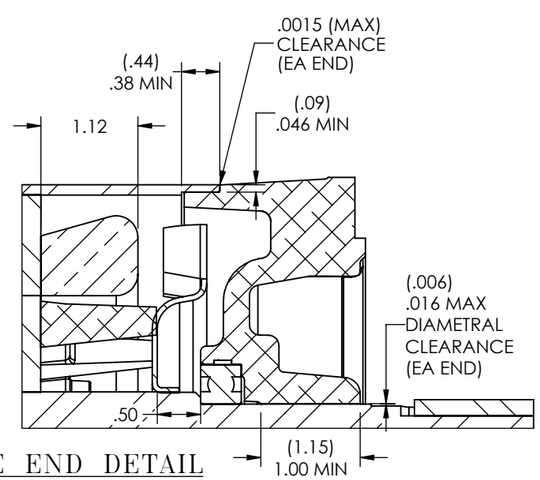

DRIVE END DETAIL

CUSTOMER IS RESPONSIBLE FOR DETERMINING THAT BALDOR'S PRODUCT WILL PERFORM SUITABLY IN THE INTENDED APPLICATION

REV. DESC: CONVERT STOCK LAYOUTS FROM AUTOCAD TO SWD			
REV: K	VERSION: 06	REVISED: 09:04:44 12/18/2023	TDR: 000001220227
MODEL NO. 34LY5331			REF: -
BY: USALMAZ			B

BALDOR

HORZ X34M 56C XPFC CL-I GP-D, CL-II GP-F&G, .50 NPT LEAD

34LY5331