ABB BALDOR RELIANCE

# Customer information packet

## CM3546-5

1HP, 1725RPM, 3PH, 60HZ, 56C, 3424M, TEFC, F1
Class -
Division - Not Applicable

Copyright © All product information within this document is subject to ABB Motors and Mechanical Inc. copyright © protection, unless otherwise noted.
11/28/2026 5:49:00 AM

## Specifications

| | |
|---|---|
| **Enclosure** | TEFC |
| **Frame** | 56C |
| **Frame Material** | Steel |
| **Frequency** | 60.00 Hz |
| **Haz Area Division** | Not Applicable |
| **Motor Letter Type** | Three Phase |
| **Output @ Frequency** | 1.000 HP @ 60 HZ |
| **Phase** | 3 |
| **Synchronous Speed @ Frequency** | 1800 RPM @ 60 HZ |
| **Voltage @ Frequency** | 575.0 V @ 60 HZ |
| **Agency Approvals** | CSA |
| | UR |
| **Ambient Temperature** | 40 °C |
| **Auxiliary Box** | NO AUXILLARY BOX |
| **Auxiliary Box Lead Termination** | None |
| **Base Indicator** | RG |
| **Bearing Grease Type** | Polyrex EM (-20F +300F) |
| **Blower** | None |
| **Current @ Voltage** | 1.300 A @ 575.0 V |
| **Design Code** | B |
| **Drip Cover** | No Drip Cover |
| **Duty Rating** | CONT |
| **Efficiency @ 100% Load** | 78.5 % |
| **Electrically Isolated Bearing** | Not Electrically Isolated |
| **Feedback Device** | NO FEEDBACK |
| **Front Face Code** | Standard |
| **Front Shaft Indicator** | None |
| **Heater Indicator** | No Heater |
| **High Voltage Full Load Amps** | 1.3 a |
| **Insulation Class** | B |
| **Inverter Code** | Not Inverter |
| **KVA Code** | K |

## Part Detail

| | |
|---|---|
| **Revision** | K |
| **Type** | AC |
| **Mech. spec.** | 34A062 |
| **Base** | |
| **Status** | INA/A |
| **Elec. spec.** | 34WGX973 |
| **Layout** | 34LYA062 |
| **Eff. date** | 05-17-2016 |
| **CD Diagram** | CD0006 |
| **Poles** | 04 |
| **Leads** | 3#18 |
| **Proprietary** | False |
| **Created date** | 01-01-0001 |

| | |
|---|---|
| **Lifting Lugs** | No Lifting Lugs |
| **Locked Bearing Indicator** | Locked Bearing |
| **Motor Lead Exit** | Ko Box |
| **Motor Lead Quantity/Wire Size** | 3 @ 18 AWG |
| **Motor Lead Termination** | Flying Leads |
| **Motor Standards** | NEMA |
| **Motor Type** | 3424M |
| **Mounting Arrangement** | F1 |
| **Number of Poles** | 4 |
| **Overall Length** | 11.97 IN |
| **Power Factor** | 72 |
| **Product Family** | General Purpose |
| **Pulley End Bearing Type** | Ball |
| **Pulley Face Code** | C-Face |
| **Pulley Shaft Indicator** | Standard |
| **Rodent Screen** | None |
| **RoHS Status** | ROHS COMPLIANT |
| **Service Factor** | 1.15 |
| **Shaft Diameter** | 0.625 IN |
| **Shaft Extension Location** | Pulley End |
| **Shaft Ground Indicator** | No Shaft Grounding |
| **Shaft Rotation** | Reversible |
| **Shaft Slinger Indicator** | No Slinger |
| **Speed** | 1725 rpm |
| **Speed Code** | Single Speed |
| **Starting Method** | Direct on line |
| **Thermal Device - Bearing** | None |
| **Thermal Device - Winding** | None |
| **Vibration Sensor Indicator** | No Vibration Sensor |

**Nameplate**

| NP1256L | | | | | | | | |
|---|---|---|---|---|---|---|---|---|
| **CAT.NO.** | CM3546-5 | | | | | | | |
| **SPEC.** | 34A062X973G1 | | | | | | | |
| **HP** | 1 | | | | | | | |
| **VOLTS** | 575 | | | | | | | |
| **AMP** | 1.3 | | | | | | | |
| **RPM** | 1725 | | | | | | | |
| **FRAME** | 56C | **HZ** | 60 | | | **PH** | 3 | |
| **SER.F.** | 1.15 | **CODE** | K | **DES** | B | **CLASS** | B | |
| **NEMA-NOM-EFF** | 78.5 | **PF** | 72 | | | | | |
| **RATING** | 40C AMB-CONT | | | | | | | |
| **CC** | | | | | | | | |
| **DE** | 6203 | **ODE** | 6203 | | | | | |
| **ENCL** | TEFC | **SN** | | | | | | |

**AC Induction Motor Performance Data**
Record # 7720
Typical performance - not guaranteed values

| **Winding:** 34WGX973-R002 | **Type:** 3424M | **Enclosure:** TEFC |
|---|---|---|

| **Nameplate Data** | | | | **575 V, 60 Hz: Single Voltage Motor** | |
|---|---|---|---|---|---|
| **Rated Output (HP)** | | | 1 | **Full Load Torque** | 3 LB-FT |
| **Volts** | | | 575 | **Start Configuration** | direct on line |
| **Full Load Amps** | | | 1.3 | **Breakdown Torque** | 10.6 LB-FT |
| **R.P.M.** | | | 1725 | **Pull-up Torque** | 6.6 LB-FT |
| **Hz** | 60 | **Phase** | 3 | **Locked-rotor Torque** | 7.3 LB-FT |
| **NEMA Design Code** | B | **KVA Code** | K | **Starting Current** | 7.4 A |
| **Service Factor (S.F.)** | | | 1.15 | **No-load Current** | 0.95 A |
| **NEMA Nom. Eff.** | 78.5 | **Power Factor** | 72 | **Line-line Res. @ 25ºC** | 27 Ω |
| **Rating - Duty** | | | 40C AMB-CONT | **Temp. Rise @ Rated Load** | |
| | | | | **Locked-rotor Power Factor** | 58 |
| | | | | **Rotor inertia** | 0.0572 LB-FT2 |

**Load Characteristics 575 V, 60 Hz, 1 HP**

| **% of Rated Load** | **25** | **50** | **75** | **100** | **125** | **150** | **S.F.** |
|---|---|---|---|---|---|---|---|
| **Power Factor** | 32 | 48 | 60 | 69 | 74 | 77 | 72 |
| **Efficiency** | 61.2 | 73.8 | 78.3 | 79.9 | 80.1 | 79.4 | 80 |
| **Speed** | 1782 | 1766 | 1749 | 1731 | 1712 | 1690 | 1720 |
| **Line amperes** | 0.98 | 1.06 | 1.19 | 1.35 | 1.54 | 1.77 | 1.46 |

ABB Motors and Mechanical Inc.

WINDING # 34WGX973

1 HP 3 PH 60 HZ 1725 RPM 575 V 3424M

Typical performance - not guaranteed values.

TORQUES(LB-FT): PO=10.6 PU=6.6 LR=7.3 LRA=7.4

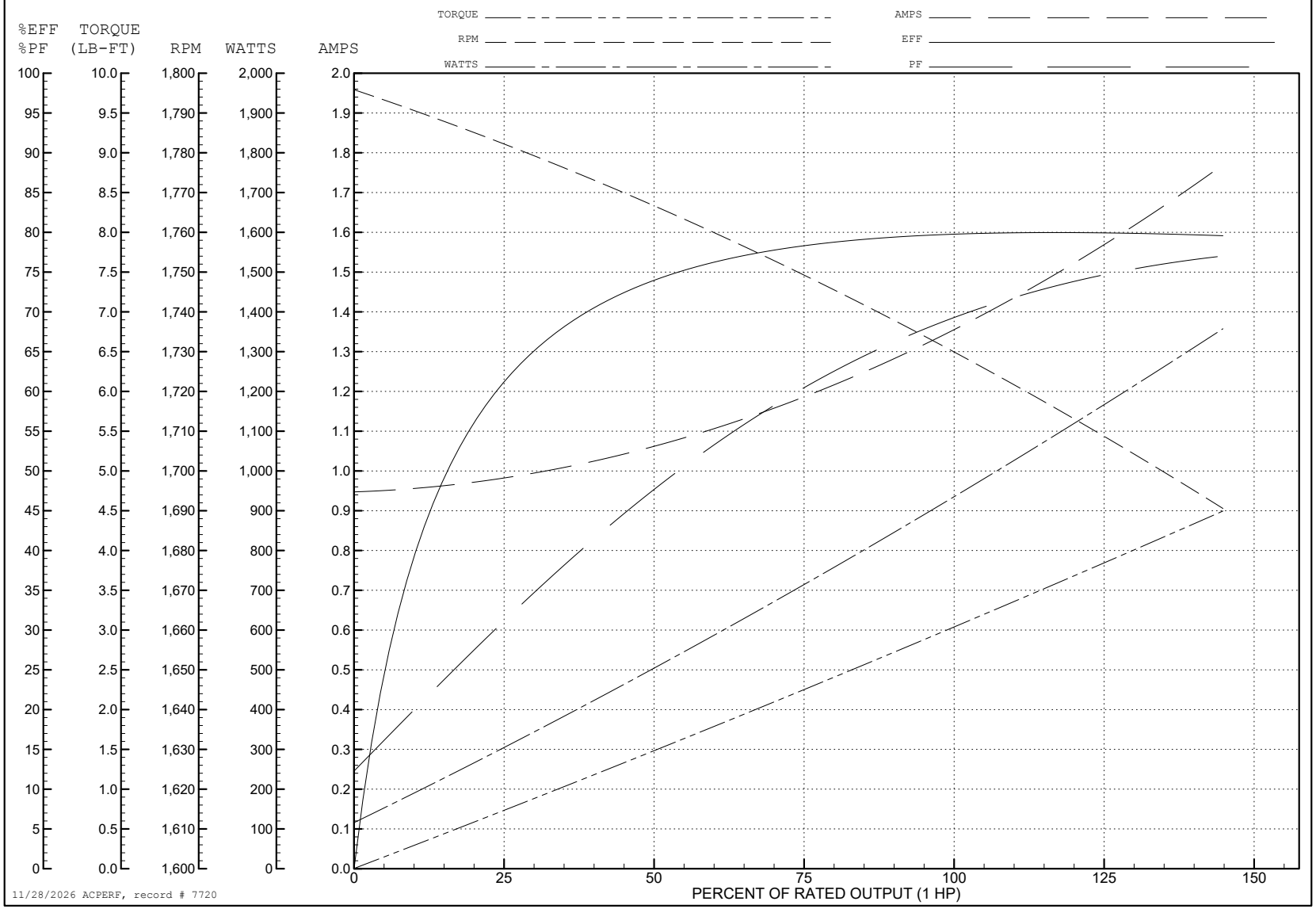

34LYA062

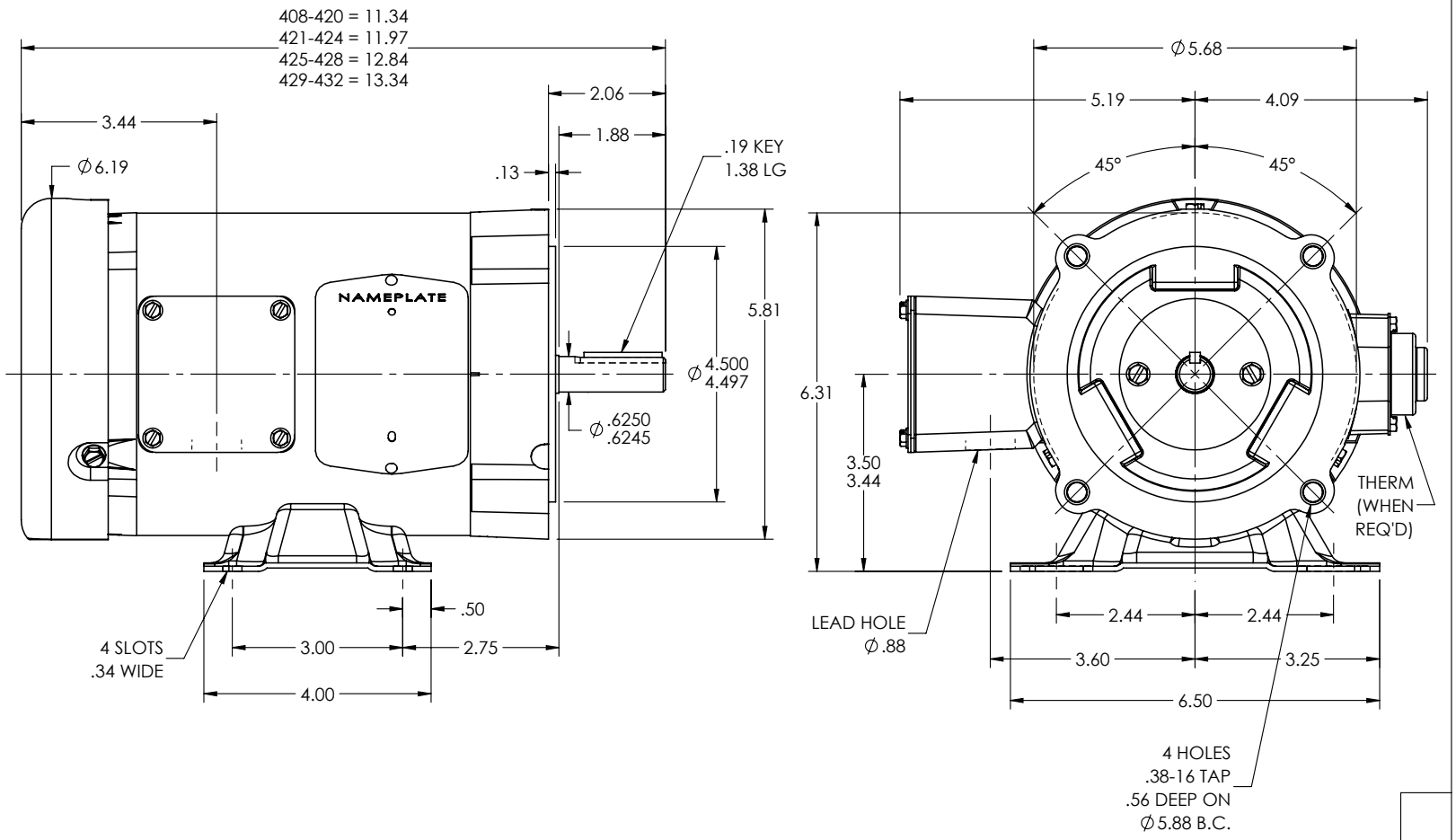


CUSTOMER IS RESPONSIBLE FOR DETERMINING THAT THE PRODUCT WILL PERFORM SUITABLY IN THE INTENDED APPLICATION

| | | | |
|---|---|---|---|
| REV. DESC: CLEAN UP DIMENSIONING | | | |
| REV: U | VERSION: 06 | REVISED: 10:13:09 10/31/2024 | TDR: 000001243684 |
| 34LYA062 | MODEL NO. 34LYA062 | | REF: - |
| | BY: ENJEFD0 | | |

BALDOR - RELIANCE®

STD HORZ 34M NEMA 56C TEFC

34LYA062

CD0006

TYPICAL WYE–CONNECTED MOTOR

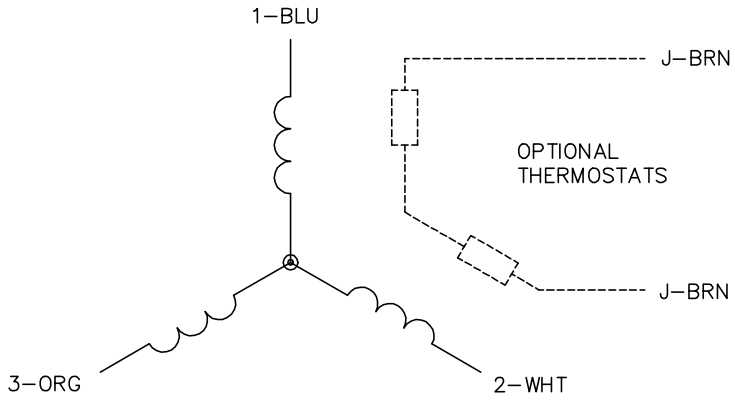


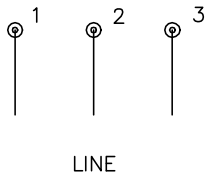


TYPICAL DELTA–CONNECTED MOTOR

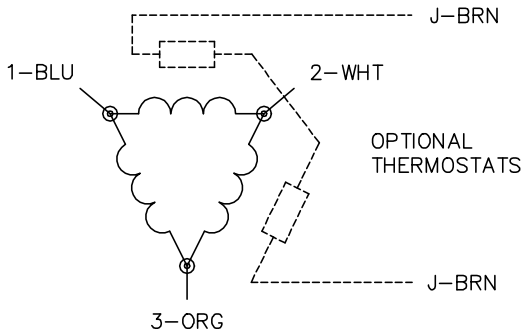


NOTES:

1. THREE LEAD MOTOR MAY BE EITHER WYE CONNECTED OR DELTA CONNECTED.
2. INTERCHANGE ANY TWO LINE LEADS TO REVERSE ROTATION.
3. OPTIONAL THERMOSTATS ARE PROVIDED WHEN SPECIFIED.
4. ACTUAL NUMBER OF INTERNAL PARALLEL CIRCUITS MAY VARY.
5. LEAD COLORS ARE OPTIONAL. LEADS MUST BE NUMBERED AS SHOWN.

CD0006

| | | |
|---|---|---|
| REV. DESC: ADD CLASS CONN00000007 | | |
| REV. LTR: E | VERSION: 01 | TDR: 000001099922 |
| FILE: \AAA\00005\141 | REVISED: 10:24:49 02/19/2019 | BY: ENBRIR0 |
| MTL: – | | |

BALDOR - RELIANCE®

3PH, SV, 3 LEADS, WYE OR DELTA CONNECTED

SH 1 of 1