36LYM038

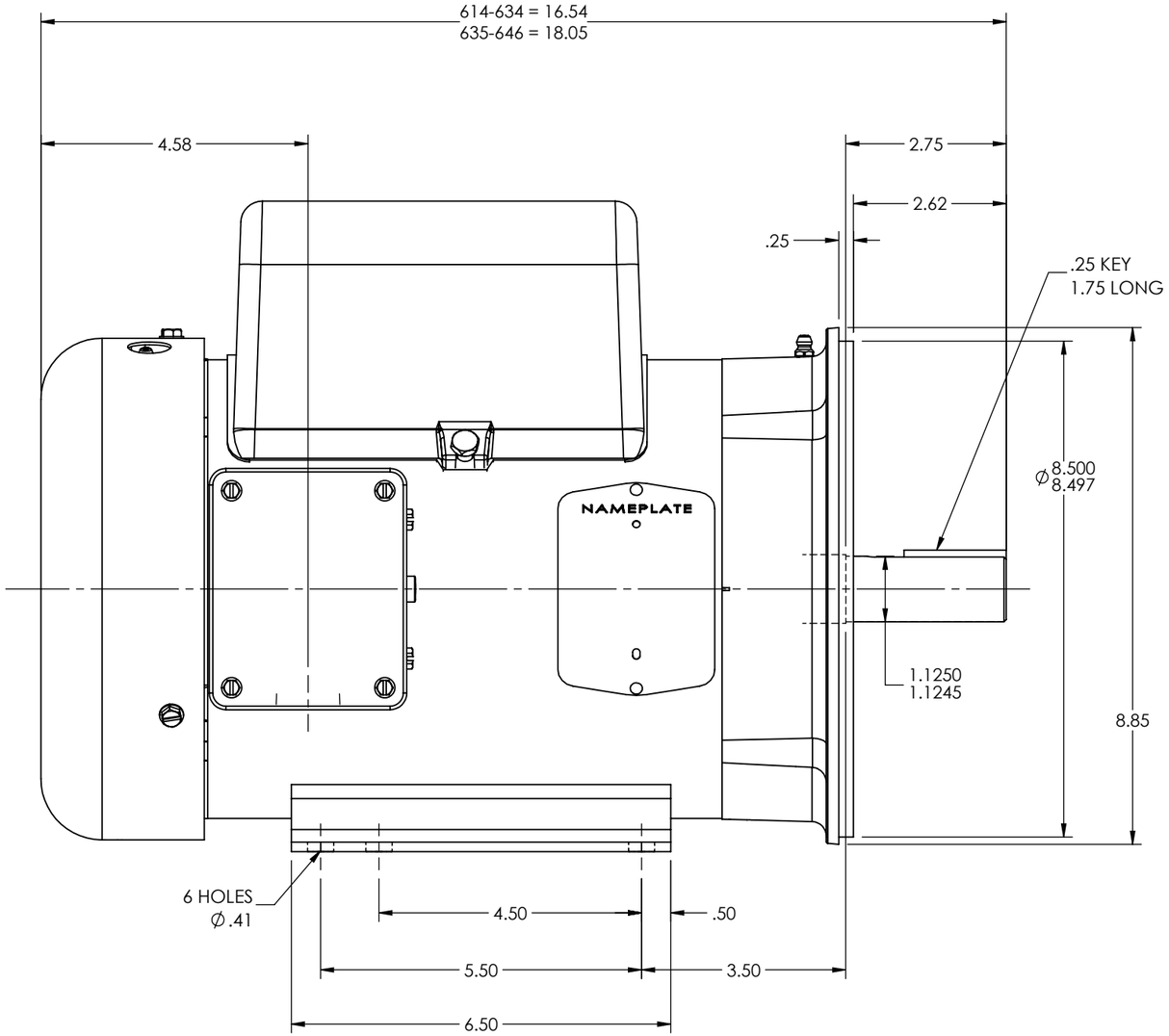

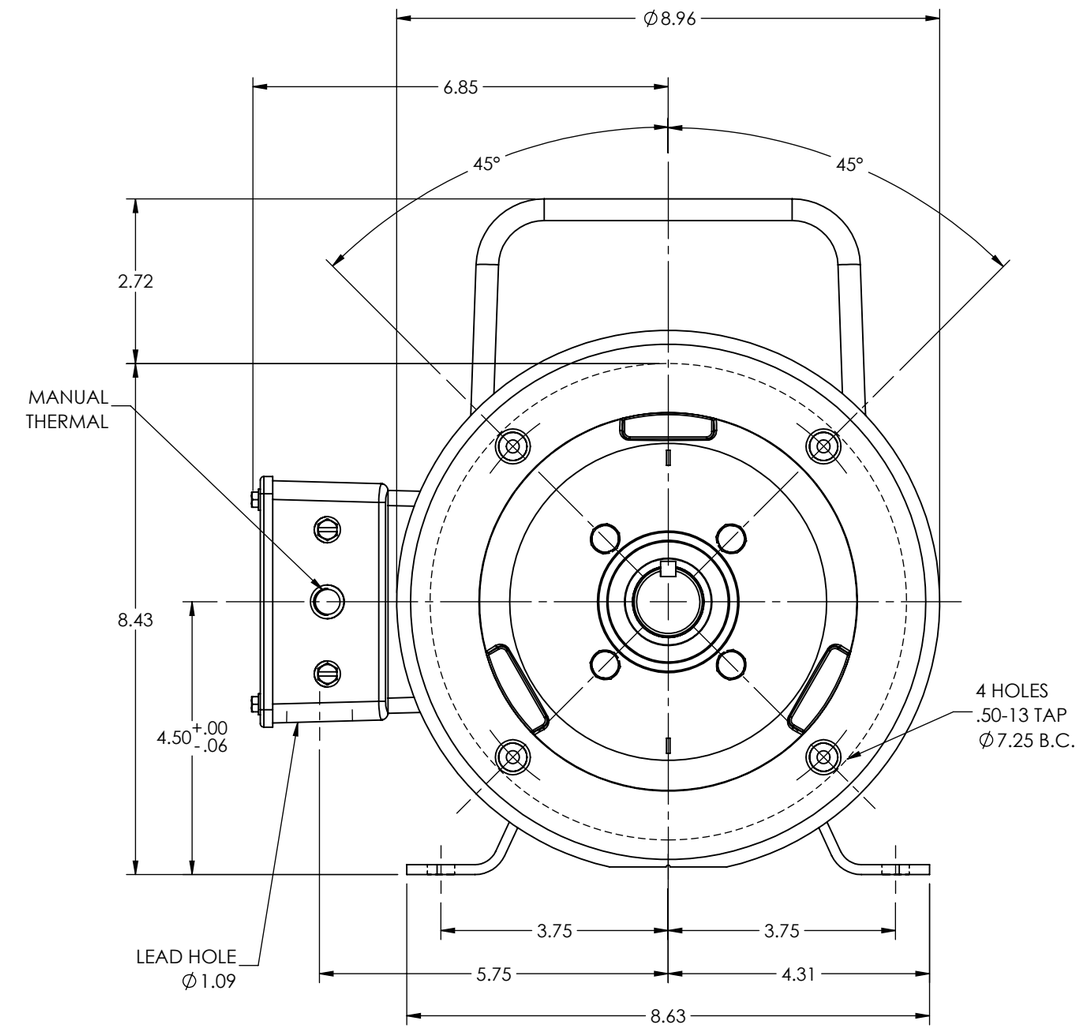

CUSTOMER IS RESPONSIBLE FOR DETERMINING THAT THE PRODUCT WILL PERFORM SUITABLY IN THE INTENDED APPLICATION

REV. DESC: CONVERT FROM AUTOCAD TO SWD			
REV: K	VERSION: 02	REVISED: 10:57:10 10/17/2023	TDR: 000001218663
MODEL NO. 36LYM038			REF: -
BY: USALMAZ			B

BALDOR - RELIANCE®

STD HORZ 36LC 182-4TC TEFC 36LC W/1.25 MTO

36LYM038