35LYKK375

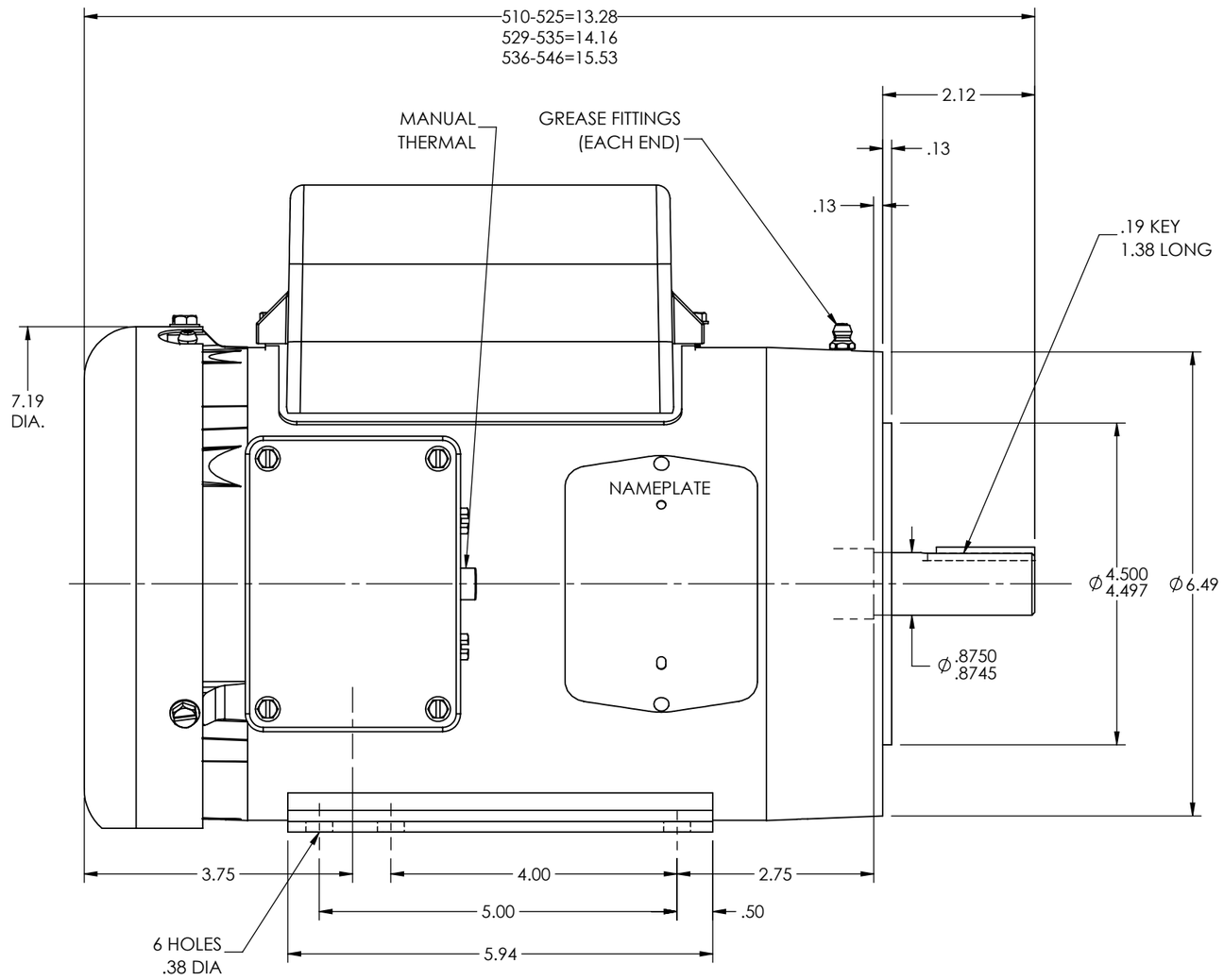

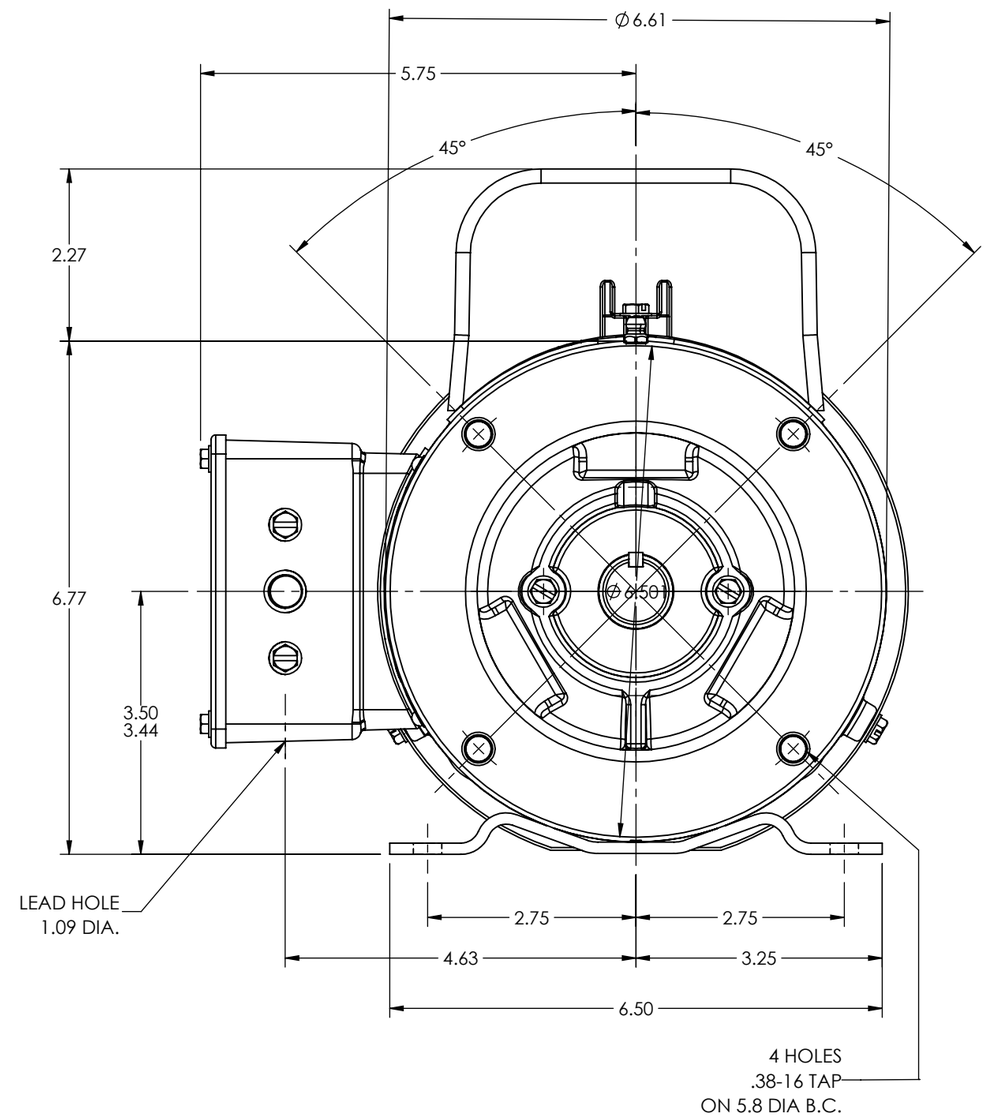

CUSTOMER IS RESPONSIBLE FOR DETERMINING THAT THE PRODUCT WILL PERFORM SUITABLY IN THE INTENDED APPLICATION

REV. DESC: UPDATE 3D MODEL BOM PER REV G, NO CHG TO 2D PRINT			
REV: D	VERSION: 04	REVISED: 01:37:00 03/08/2022	TDR: 000001187335
MODEL NO. 35LYKK375			REF: -
BY: USBUFRA			B

BALDOR - RELIANCE®

HOR 143-5TC TEFC 35LC W/1" MTO IN KBOX, 1.09 LEAD HOLE
SH 1 OF 1

35LYKK375