36LYF984

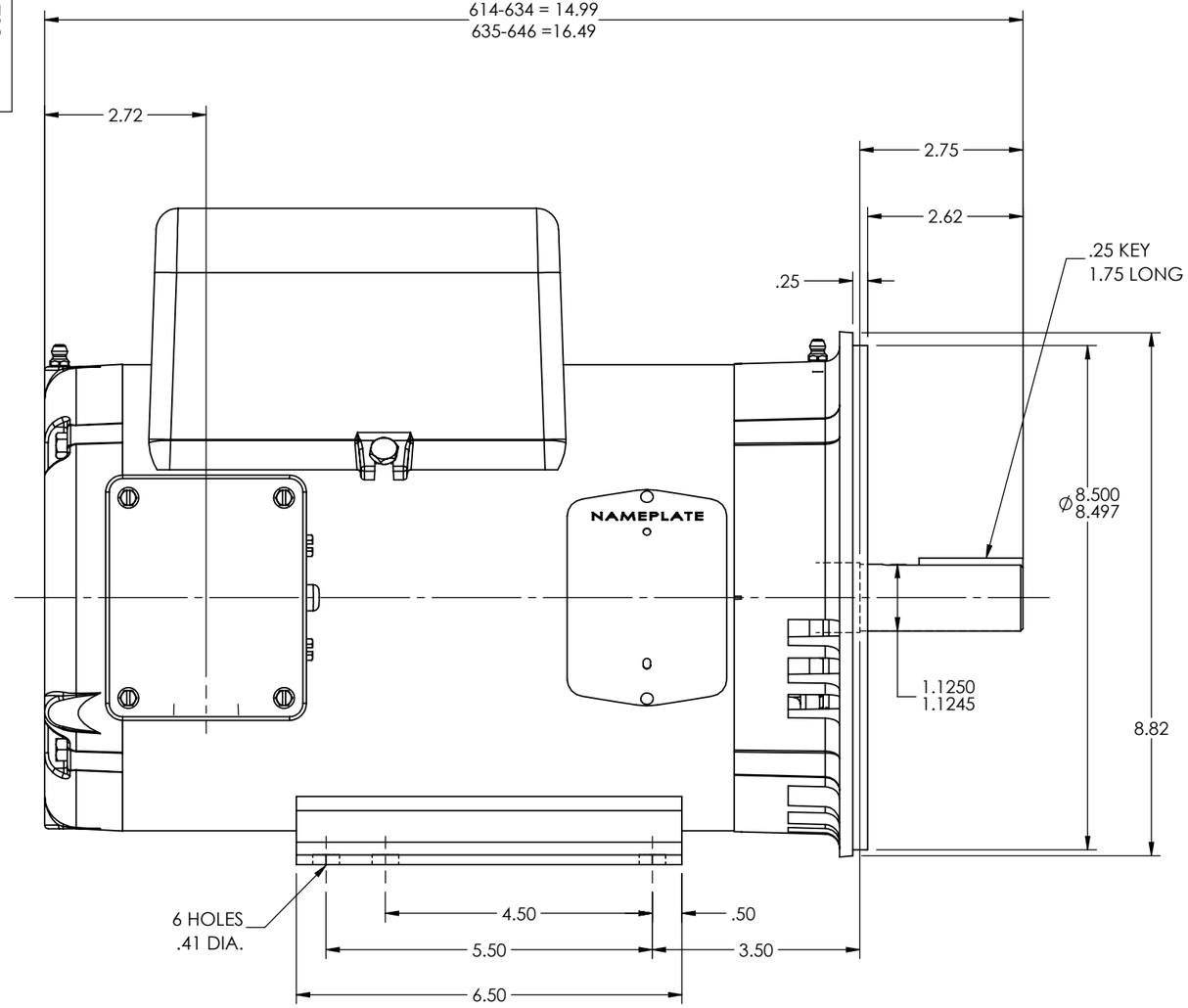

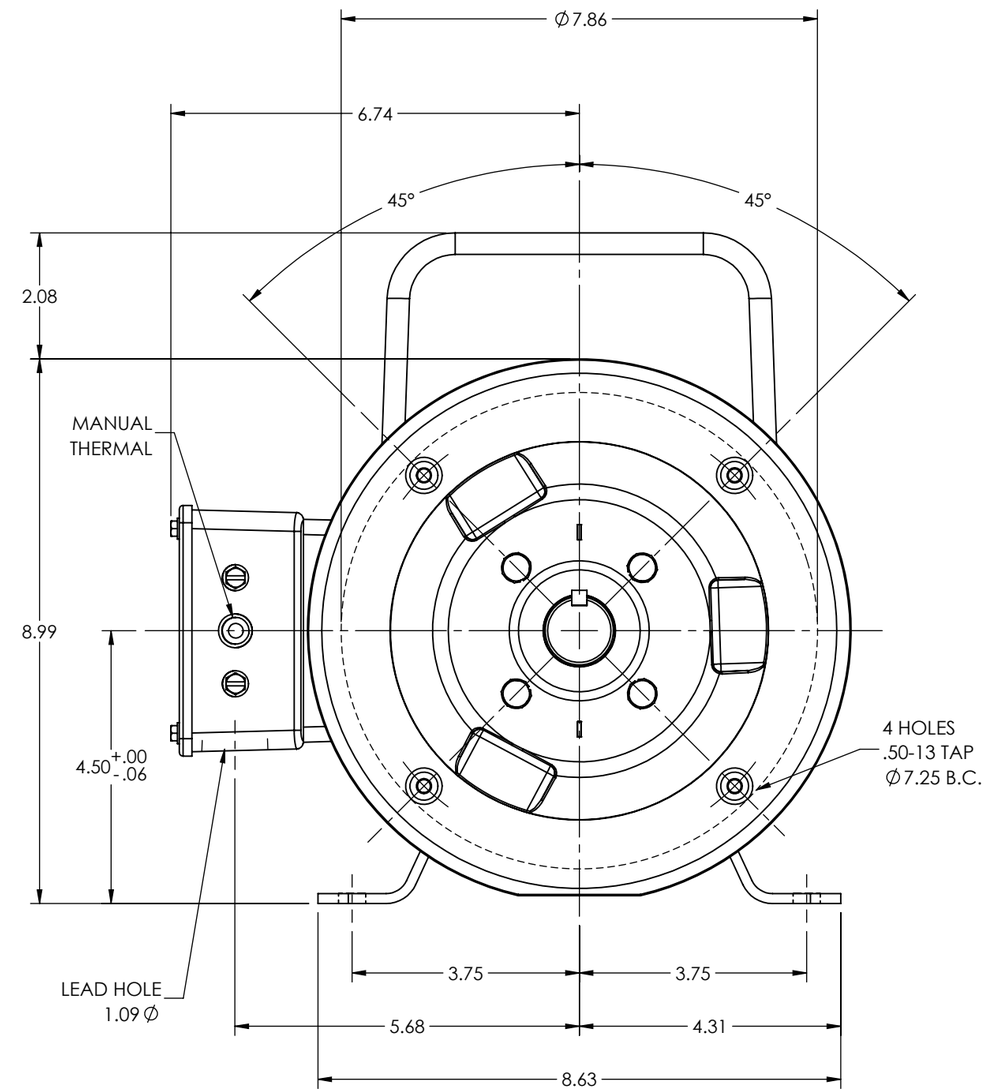

CUSTOMER IS RESPONSIBLE FOR DETERMINING THAT THE PRODUCT WILL PERFORM SUITABLY IN THE INTENDED APPLICATION

REV. DESC: CONVERT FROM AUTOCAD TO SWD			
REV: G	VERSION: 03	REVISED: 09:08:08 10/17/2023	TDR: 000001218663
MODEL NO. 36LYF984			REF: -
BY: USALMAZ			B

BALDOR - RELIANCE®

STD HORZ 36LC 182-4TC OPEN FACE MTD W/1.00 MTO

36LYF984