Customer information packet

CJM3111

.75HP, 3450RPM, 3PH, 60HZ, 56J, 3416M, OPEN, F1
Class - None
Division - Not Applicable

Copyright © All product information within this document is subject to ABB Motors and Mechanical Inc. copyright © protection, unless otherwise noted.
11/22/2026 9:07:41 PM

Specifications

Enclosure	OPEN
Frame	56J
Frame Material	Steel
Frequency	60.00 Hz
Haz Area Class and Group	None
Haz Area Division	Not Applicable
Motor Letter Type	Three Phase
Output @ Frequency	.750 HP @ 60 HZ
Phase	3
Synchronous Speed @ Frequency	3600 RPM @ 60 HZ
Voltage @ Frequency	208.0 V @ 60 HZ
	230.0 V @ 60 HZ
	460.0 V @ 60 HZ
Agency Approvals	CSA
	UR
Ambient Temperature	40 °C
Auxiliary Box	NO AUXILLARY BOX
Auxiliary Box Lead Termination	None
Base Indicator	Rigid
Bearing Grease Type	Polyrex EM (-20F +300F)
Blower	None
Current @ Voltage	4.000 A @ 208.0 V
	3.200 A @ 208.0 V
	3.000 A @ 230.0 V
	1.500 A @ 460.0 V
Design Code	B
Drip Cover	Drip Cover
Duty Rating	CONT
Efficiency @ 100% Load	74.0 %
Electrically Isolated Bearing	Not Electrically Isolated
Feedback Device	NO FEEDBACK
Front Face Code	Drip Cover Mounting

Part Detail

Revision	Z
Type	AC
Mech. spec.	34F029
Base	
Status	PRD/A
Elec. spec.	34WG2719
Layout	34LYF029
Eff. date	12-31-2024
CD Diagram	CD0005
Poles	02
Leads	9#18
Proprietary	False
Created date	01-01-0001

Front Shaft Indicator	None
Heater Indicator	No Heater
High Voltage Full Load Amps	1.5 a
Insulation Class	B
Inverter Code	Not Inverter
KVA Code	M
Lifting Lugs	No Lifting Lugs
Locked Bearing Indicator	Locked Bearing
Motor Lead Exit	Ko Box
Motor Lead Quantity/Wire Size	9 @ 18 AWG
Motor Lead Termination	Flying Leads
Motor Standards	NEMA
Motor Type	3416M
Mounting Arrangement	F1
Number of Poles	2
Overall Length	11.72 IN
Power Factor	66
Product Family	General Purpose
Pulley End Bearing Type	Ball
Pulley Face Code	C-Face
Pulley Shaft Indicator	Ext Thread
Rodent Screen	None
RoHS Status	ROHS COMPLIANT
Service Factor	1.50
Shaft Diameter	0.625 IN
Shaft Extension Location	Pulley End
Shaft Ground Indicator	No Shaft Grounding
Shaft Rotation	Reversible
Shaft Slinger Indicator	No Slinger
Speed	3450 rpm
Speed Code	Single Speed
Starting Method	Direct on line
Thermal Device - Bearing	None
Thermal Device - Winding	None

Vibration Sensor Indicator	No Vibration Sensor

Nameplate

NP1256L											
CAT.NO.	CJM3111										
SPEC.	34F29-2719										
HP	.75										
VOLTS	208-230/460										
AMP	3.2-3/1.5										
RPM	3450										
FRAME	56J		**HZ**	60			**PH**	3			
SER.F.	1.50	**CODE**	M	**DES**	B	**CLASS**		B			
NEMA-NOM-EFF	74	**PF**	66								
RATING	40C AMB-CONT										
CC											
DE	6203		**ODE**	6203							
ENCL	OPEN	**SN**									
	SFA 4-3.8/1.9										

AC Induction Motor Performance Data
Record # 6656
Typical performance - not guaranteed values

Winding: 34WG2719-R001	**Type:** 3416M	**Enclosure:** TEFC

Nameplate Data				**460 V, 60 Hz: High Voltage Connection**	
Rated Output (HP)			.75	**Full Load Torque**	1.1 LB-FT
Volts			208-230/460	**Start Configuration**	direct on line
Full Load Amps			3.2-3/1.5	**Breakdown Torque**	6.2 LB-FT
R.P.M.			3450	**Pull-up Torque**	5.2 LB-FT
Hz	60	**Phase**	3	**Locked-rotor Torque**	5.4 LB-FT
NEMA Design Code	B	**KVA Code**	M	**Starting Current**	11.4 A
Service Factor (S.F.)			1.5	**No-load Current**	1.3 A
NEMA Nom. Eff.	74	**Power Factor**	66	**Line-line Res. @ 25ºC**	16.4 Ω
Rating - Duty			40C AMB-CONT	**Temp. Rise @ Rated Load**	55°C
S.F. Amps			4-3.8/1.9	**Temp. Rise @ S.F. Load**	78°C

Load Characteristics 460 V, 60 Hz, 0.75 HP

% of Rated Load	**25**	**50**	**75**	**100**	**125**	**150**	**S.F.**
Power Factor	30	43	55	63	70	74	0
Efficiency	47.6	62.6	69.8	73	74.4	74.8	0
Speed	3569	3544	3518	3492	3463	3433	0
Line amperes	1.3	1.3	1.4	1.5	1.7	1.9	1.9

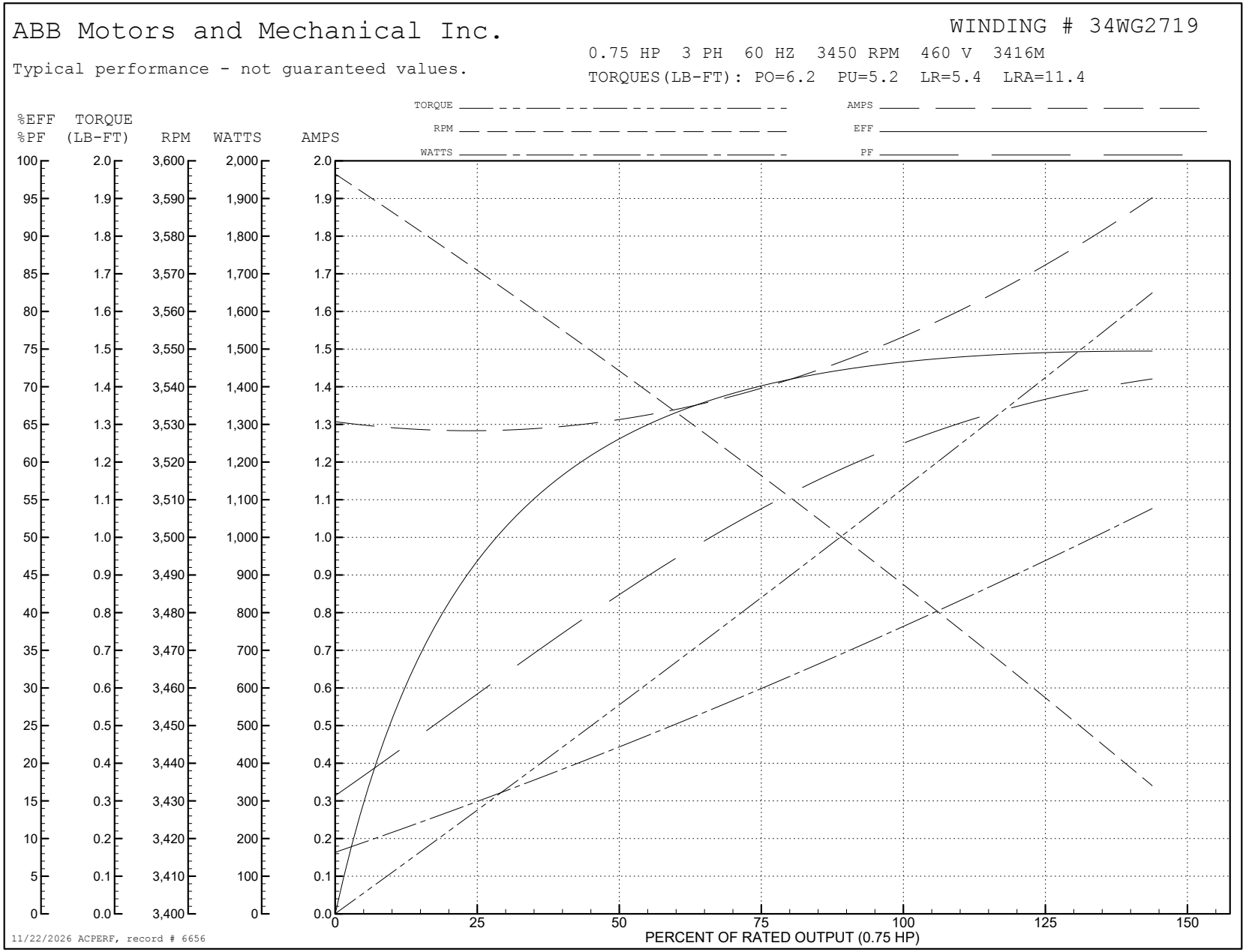
ABB Motors and Mechanical Inc.
WINDING # 34WG2719
0.75 HP 3 PH 60 HZ 3450 RPM 460 V 3416M
Typical performance - not guaranteed values.
TORQUES(LB-FT): PO=6.2 PU=5.2 LR=5.4 LRA=11.4
TORQUE
RPM
WATTS
AMPS
EFF
PF
%EFF %PF
TORQUE (LB-FT)
RPM
WATTS
AMPS
PERCENT OF RATED OUTPUT (0.75 HP)
11/22/2026 ACPERF, record # 6656

34LYF029

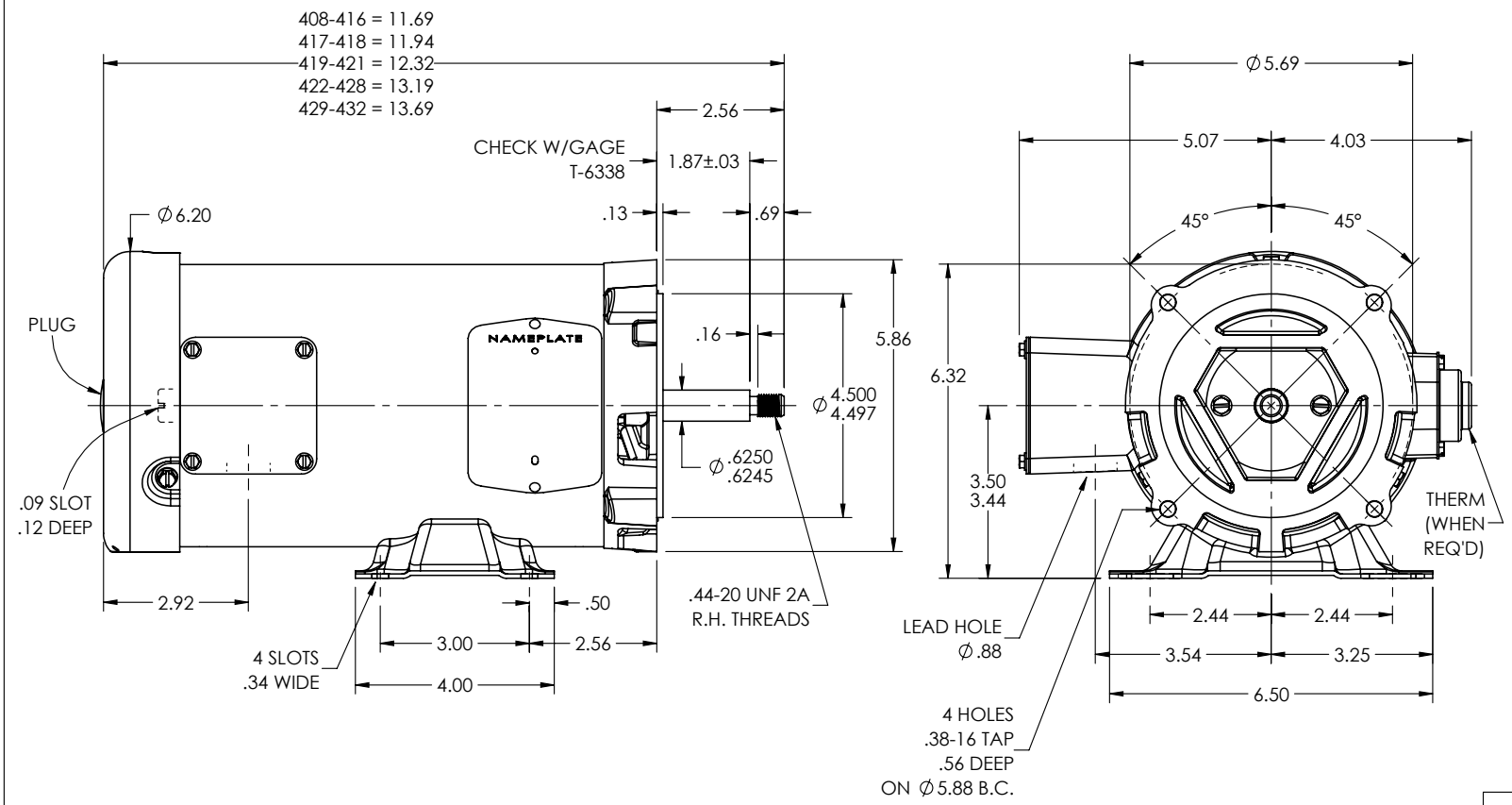

CUSTOMER IS RESPONSIBLE FOR DETERMINING THAT THE PRODUCT WILL PERFORM SUITABLY IN THE INTENDED APPLICATION

REV. DESC: CLEAN UP DIMENSIONING			BALDOR - RELIANCE®
REV: N	VERSION: 04	REVISED: 01:53:09 08/29/2025	TDR: 000001262510
34LYF029	MODEL NO. 34LYF029		REF: -
	BY: ENJEFD0		STD HOR 56J OPEN 34M W/DRIP CVR

34LYF029

CD0005

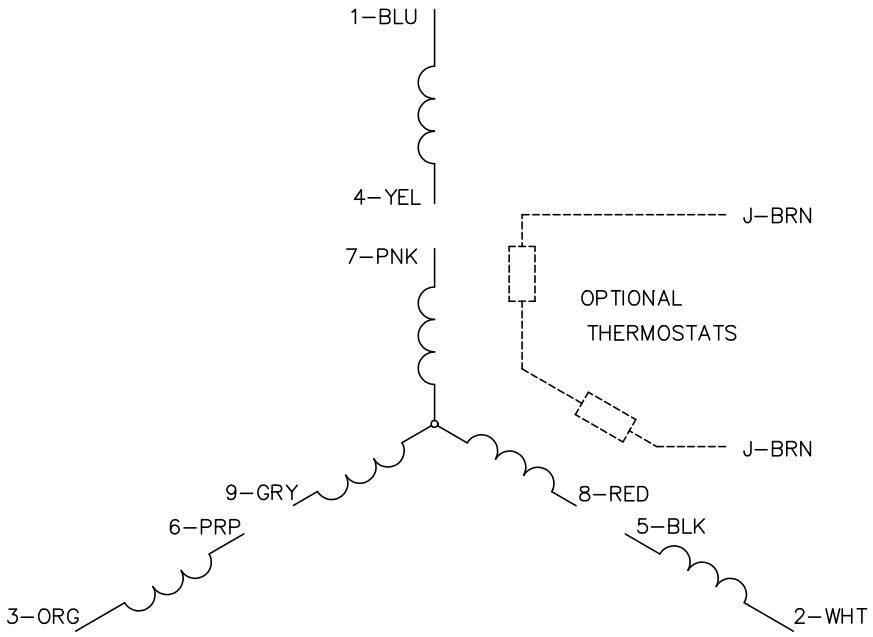

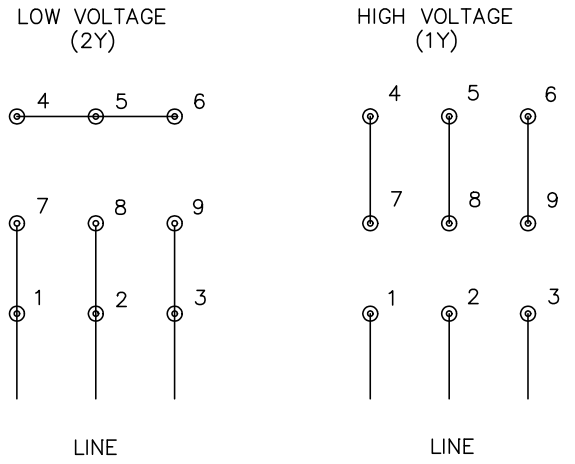

NOTES:

1. INTERCHANGE ANY TWO LINE LEADS TO REVERSE ROTATION.
2. OPTIONAL THERMOSTATS ARE PROVIDED WHEN SPECIFIED.
3. ACTUAL NUMBER OF INTERNAL PARALLEL CIRCUITS MAY BE A MULTIPLE OF THOSE SHOWN ABOVE.
4. LEAD COLORS ARE OPTIONAL. LEADS MUST ALWAYS BE NUMBERED AS SHOWN.

CD0005

REV. DESC: REVISE TO SHOW OPTIONAL COLORS			BALDOR ELECTRIC Co.
REV. LTR: E	BY: JLP	REVISED: 01/19/99 10:15	TDR: 0171435
CD0005		FILE: AAA00005140	MDL: –
		MTL: –	3PH, DV, 9 LEADS