ABB BALDOR RELIANCE

Customer information packet

CJM3108

.5HP, 1720RPM, 3PH, 60HZ, 56J, 3416M, OPEN, F1
Class - None
Division - Not Applicable

Copyright © All product information within this document is subject to ABB Motors and Mechanical Inc. copyright © protection, unless otherwise noted.
11/28/2026 10:13:50 PM

Specifications

Enclosure	OPEN
Frame	56J
Frame Material	Steel
Frequency	60.00 Hz
Haz Area Class and Group	None
Haz Area Division	Not Applicable
Motor Letter Type	Three Phase
Output @ Frequency	.500 HP @ 60 HZ
Phase	3
Synchronous Speed @ Frequency	1800 RPM @ 60 HZ
Voltage @ Frequency	230.0 V @ 60 HZ
	460.0 V @ 60 HZ
Agency Approvals	CSA
	UR
Ambient Temperature	40 °C
Auxiliary Box	NO AUXILLARY BOX
Auxiliary Box Lead Termination	None
Base Indicator	Rigid
Bearing Grease Type	Polyrex EM (-20F +300F)
Blower	None
Current @ Voltage	.800 A @ 460.0 V
	1.600 A @ 230.0 V
	1.700 A @ 208.0 V
Design Code	B
Drip Cover	Drip Cover
Duty Rating	CONT
Efficiency @ 100% Load	75.5 %
Electrically Isolated Bearing	Not Electrically Isolated
Feedback Device	NO FEEDBACK
Front Shaft Indicator	None
Heater Indicator	No Heater
High Voltage Full Load Amps	0.8 a

Part Detail

Revision	D
Type	AC
Mech. spec.	34F029
Base	
Status	PRD/A
Elec. spec.	34WGR706
Layout	34LYF029
Eff. date	03-23-2026
CD Diagram	CD0005
Poles	04
Leads	9#18
Proprietary	False
Created date	01-29-2021

Insulation Class	B
Inverter Code	Not Inverter
KVA Code	J
Lifting Lugs	No Lifting Lugs
Locked Bearing Indicator	Locked Bearing
Motor Lead Quantity/Wire Size	9 @ 18 AWG
Motor Lead Termination	Flying Leads
Motor Standards	NEMA
Motor Type	3416M
Mounting Arrangement	F1
Number of Poles	4
Overall Length	11.72 IN
Power Factor	75
Product Family	General Purpose
Pulley End Bearing Type	Ball
Pulley Face Code	C-Face
Pulley Shaft Indicator	Ext Thread
Rodent Screen	None
Service Factor	1.25
Shaft Diameter	0.625 IN
Shaft Ground Indicator	No Shaft Grounding
Shaft Rotation	Reversible
Shaft Slinger Indicator	No Slinger
Speed	1720 rpm
Speed Code	Single Speed
Starting Method	Direct on line
Thermal Device - Bearing	None
Thermal Device - Winding	None
Vibration Sensor Indicator	No Vibration Sensor
Winding Thermal 1	None
Winding Thermal 2	None

Nameplate

NP1256L									
CAT.NO.	CJM3108								
SPEC.	34F029R706								
HP	.5								
VOLTS	230/460								
AMP	1.6/.8								
RPM	1720								
FRAME	56J		**HZ**	60			**PH**	3	
SER.F.	1.25	**CODE**	J	**DES**	B	**CLASS**		B	
NEMA-NOM-EFF	75.5	**PF**	75						
RATING	40C AMB-CONT								
CC									
DE	6203		**ODE**	6203					
ENCL	OPEN	**SN**							
	SFA 1.9/0.95								

AC Induction Motor Performance Data
Record # 110334
Typical performance - not guaranteed values

Winding: 34WGR706-R002	**Type:** 3416M	**Enclosure:** TEFC

Nameplate Data			
Rated Output (HP)			.5
Volts			230/460
Full Load Amps			1.6/.8
R.P.M.			1720
Hz	60	**Phase**	3
NEMA Design Code	B	**KVA Code**	J
Service Factor (S.F.)			1.25
NEMA Nom. Eff.	75.5	**Power Factor**	75
Rating - Duty			40C AMB-CONT
S.F. Amps			1.9/0.95

460 V, 60 Hz: High Voltage Connection	
Full Load Torque	1.53 LB-FT
Start Configuration	direct on line
Breakdown Torque	5.15 LB-FT
Pull-up Torque	2.87 LB-FT
Locked-rotor Torque	3.94 LB-FT
Starting Current	5 A
No-load Current	0.577 A
Line-line Res. @ 25ºC	48.9 Ω
Temp. Rise @ Rated Load	50°C
Temp. Rise @ S.F. Load	70°C
Locked-rotor Power Factor	66.6
Rotor inertia	0.0381 lb-ft²

Load Characteristics 460 V, 60 Hz, 0.5 HP

% of Rated Load	**25**	**50**	**75**	**100**	**125**	**150**	**S.F.**
Power Factor	34	53	66	75	81	84	81
Efficiency	58.6	70.6	74.6	75.5	74.8	72.9	74.8
Speed	1779	1761	1741	1718	1692	1662	1692
Line amperes	0.583	0.631	0.712	0.824	0.962	1.14	0.962

ABB Motors and Mechanical Inc.

WINDING # 34WGR706

0.5 HP 3 PH 60 HZ 1720 RPM 460 V 3416M

Typical performance - not guaranteed values.

TORQUES(LB-FT): PO=5.15 PU=2.87 LR=3.94 LRA=5

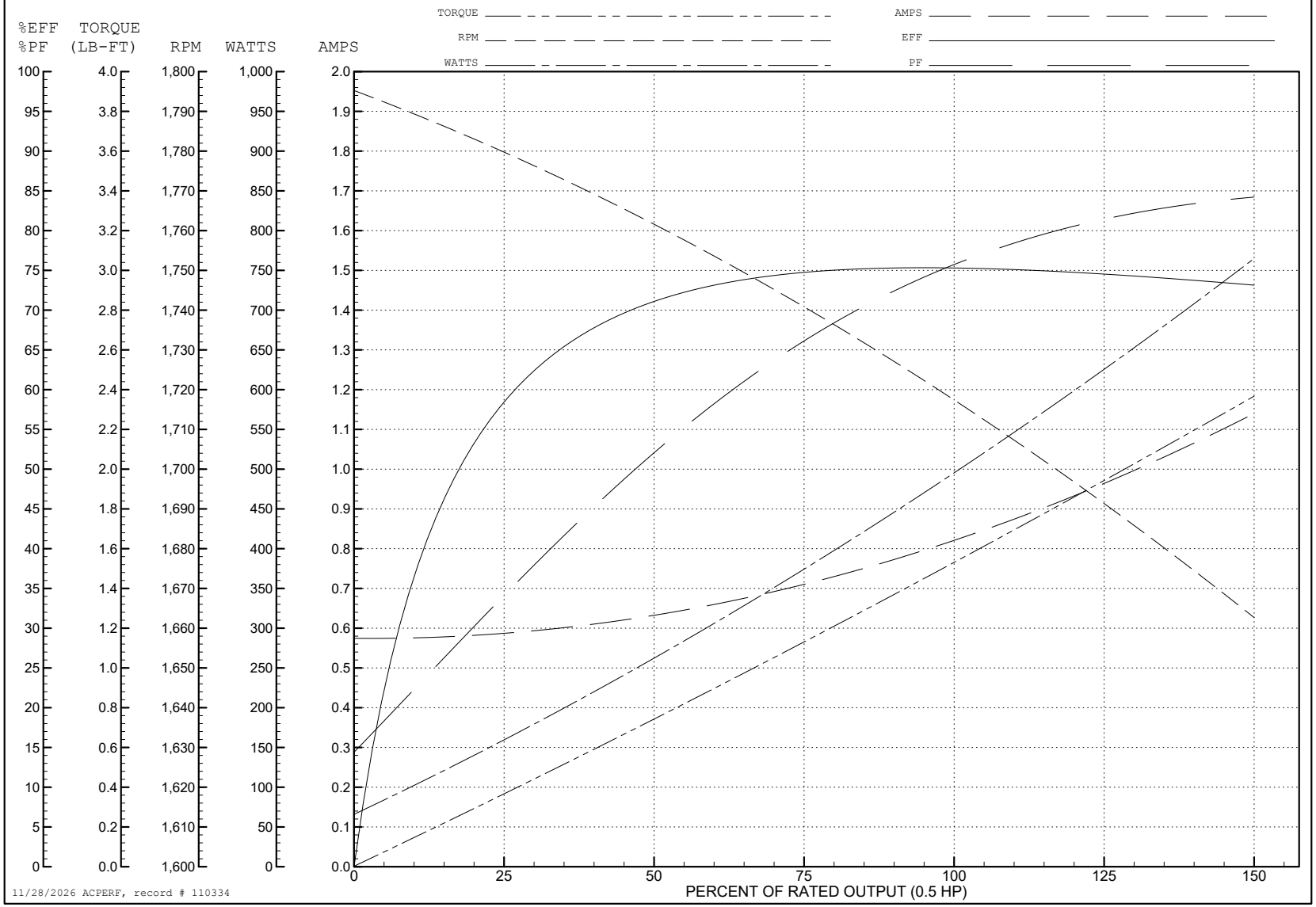

11/28/2026 ACPERF, record # 110334

34LYF029

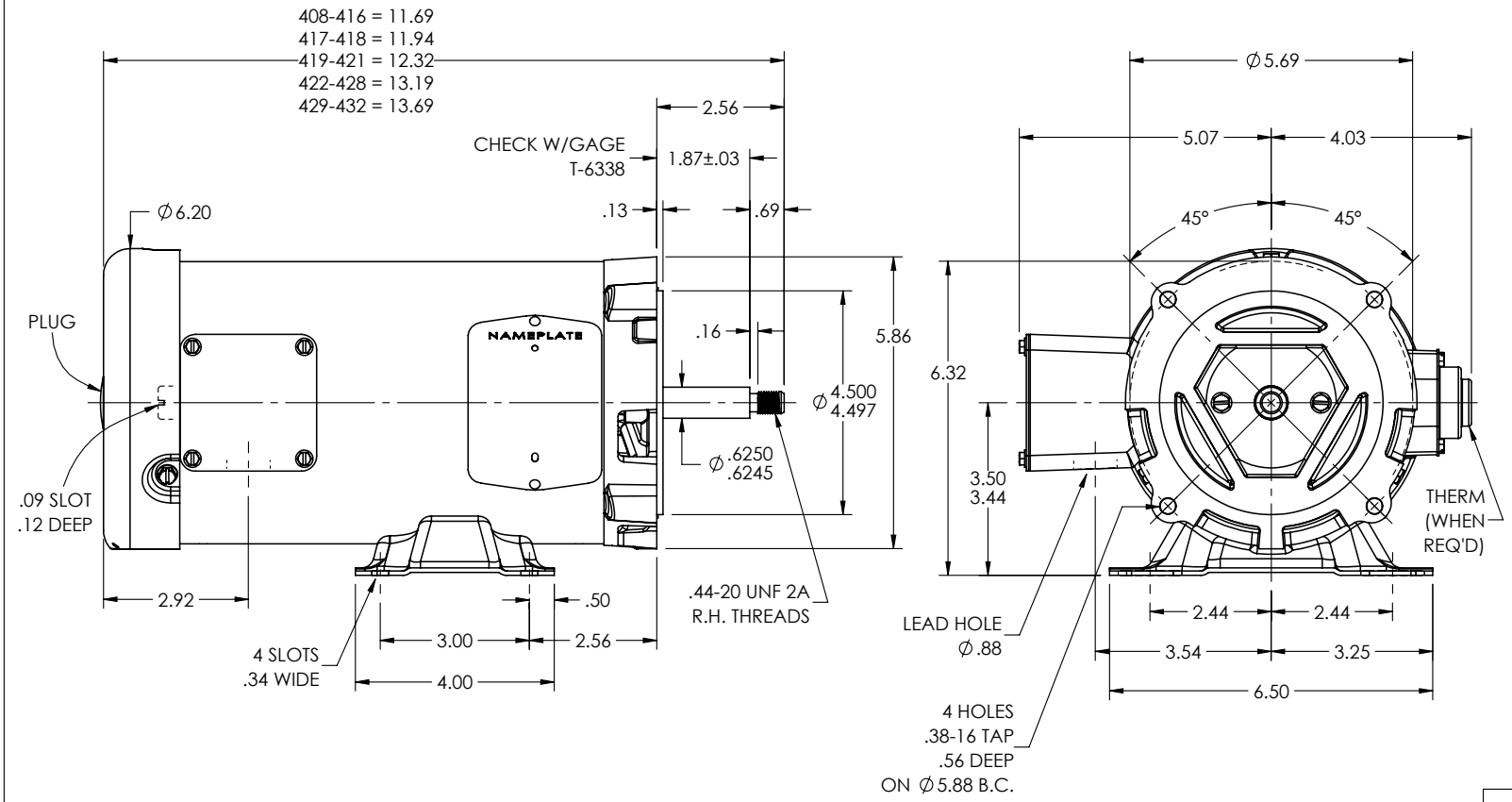

CUSTOMER IS RESPONSIBLE FOR DETERMINING THAT THE PRODUCT WILL PERFORM SUITABLY IN THE INTENDED APPLICATION

REV. DESC: CLEAN UP DIMENSIONING			
REV: N	VERSION: 04	REVISED: 01:53:09 08/29/2025	TDR: 000001262510
34LYF029	MODEL NO. 34LYF029		REF: -
	BY: ENJEFD0		

BALDOR - RELIANCE®

STD HOR 56J OPEN 34M W/DRIP CVR

34LYF029

CD0005

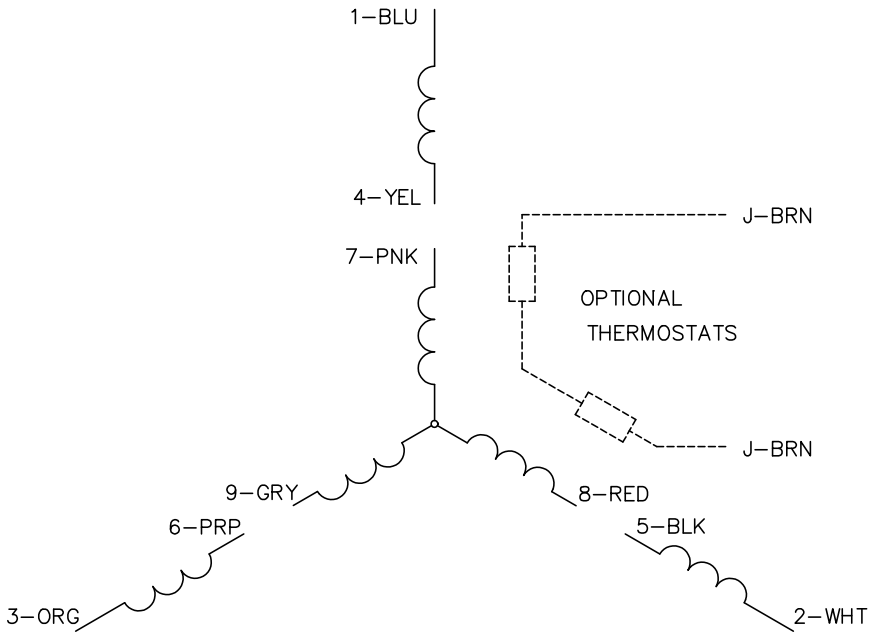

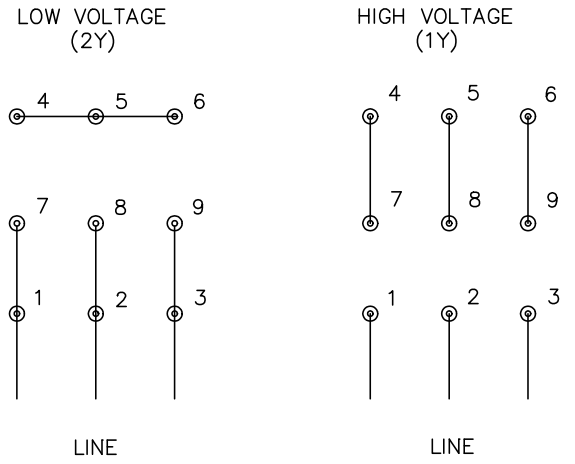

NOTES:

1. INTERCHANGE ANY TWO LINE LEADS TO REVERSE ROTATION.
2. OPTIONAL THERMOSTATS ARE PROVIDED WHEN SPECIFIED.
3. ACTUAL NUMBER OF INTERNAL PARALLEL CIRCUITS MAY BE A MULTIPLE OF THOSE SHOWN ABOVE.
4. LEAD COLORS ARE OPTIONAL. LEADS MUST ALWAYS BE NUMBERED AS SHOWN.

CD0005

REV. DESC: REVISE TO SHOW OPTIONAL COLORS			BALDOR ELECTRIC Co.
REV. LTR: E	BY: JLP	REVISED: 01/19/99 10:15	TDR: 0171435
CD0005		FILE: AAA00005140	MDL: –
		MTL: –	3PH, DV, 9 LEADS