35LYZ185

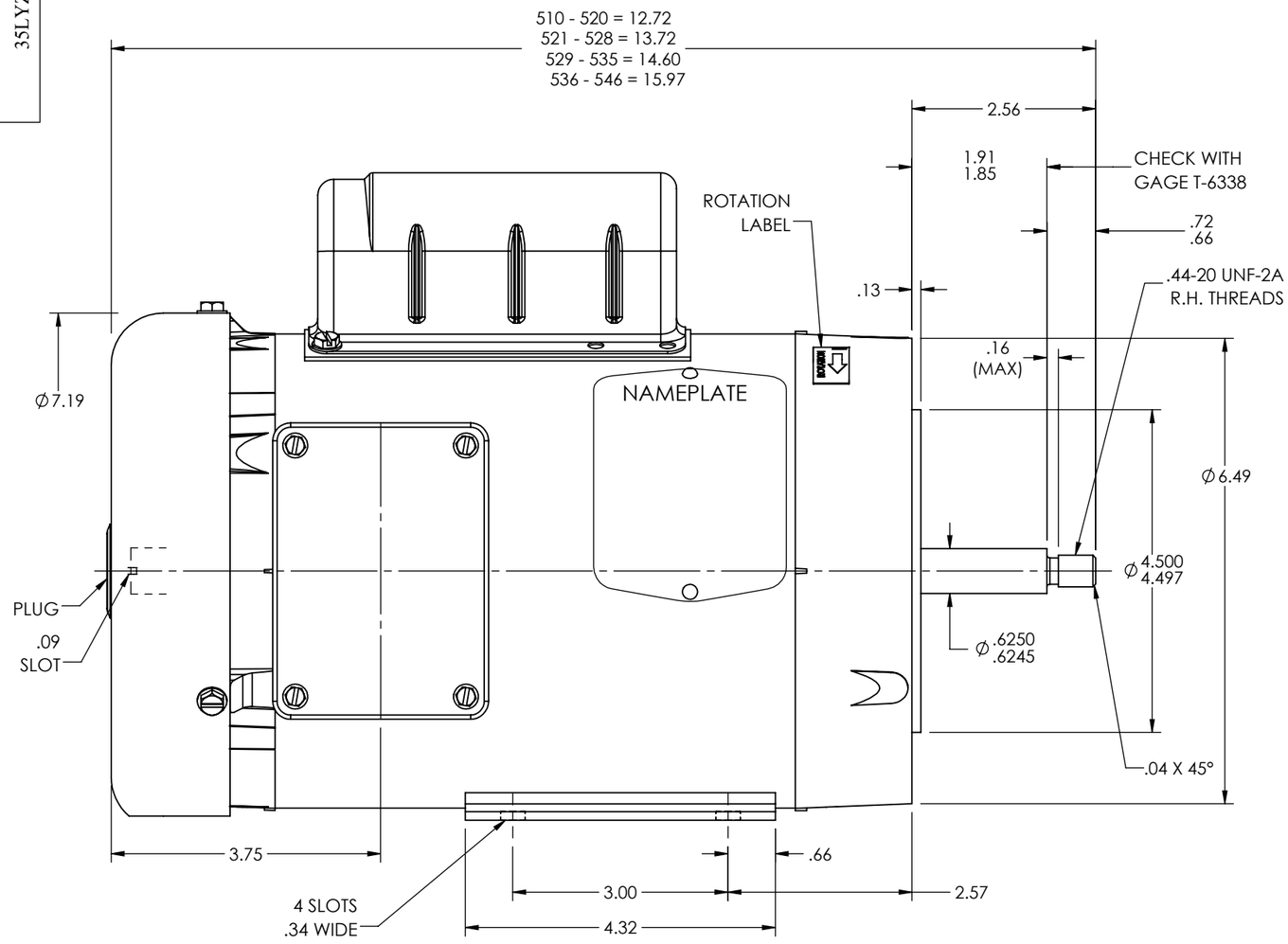

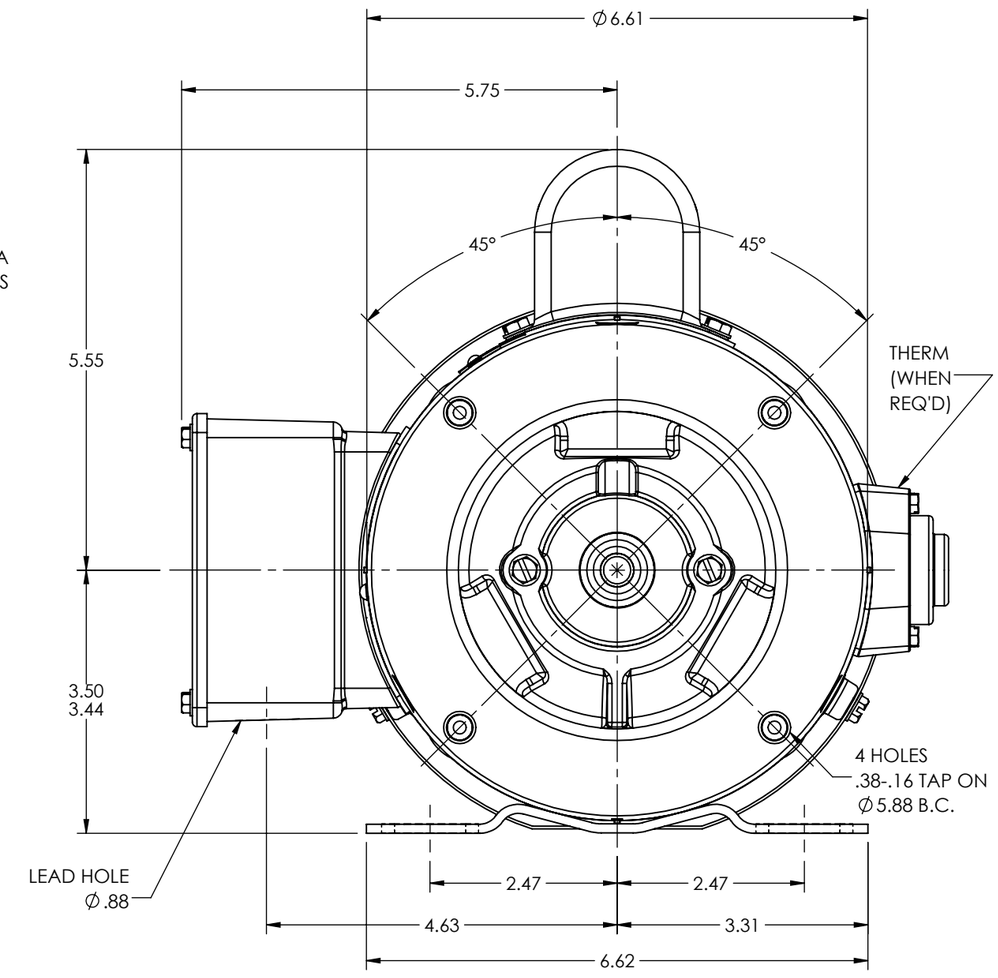

CUSTOMER IS RESPONSIBLE FOR DETERMINING THAT THE PRODUCT WILL PERFORM SUITABLY IN THE INTENDED APPLICATION

REV. DESC: ADD THERMAL OPTION			
REV: D	VERSION: 04	REVISED: 09:19:24 11/29/2022	TDR: 000001200319
MODEL NO. 35LYZ185			REF: -
BY: USANEAT			B

BALDOR - RELIANCE®

HOR 56J TEFC 35L 2 POLE "W" BASE 35BA4010

SH 1 of 1

35LYZ185