37LY-000-395

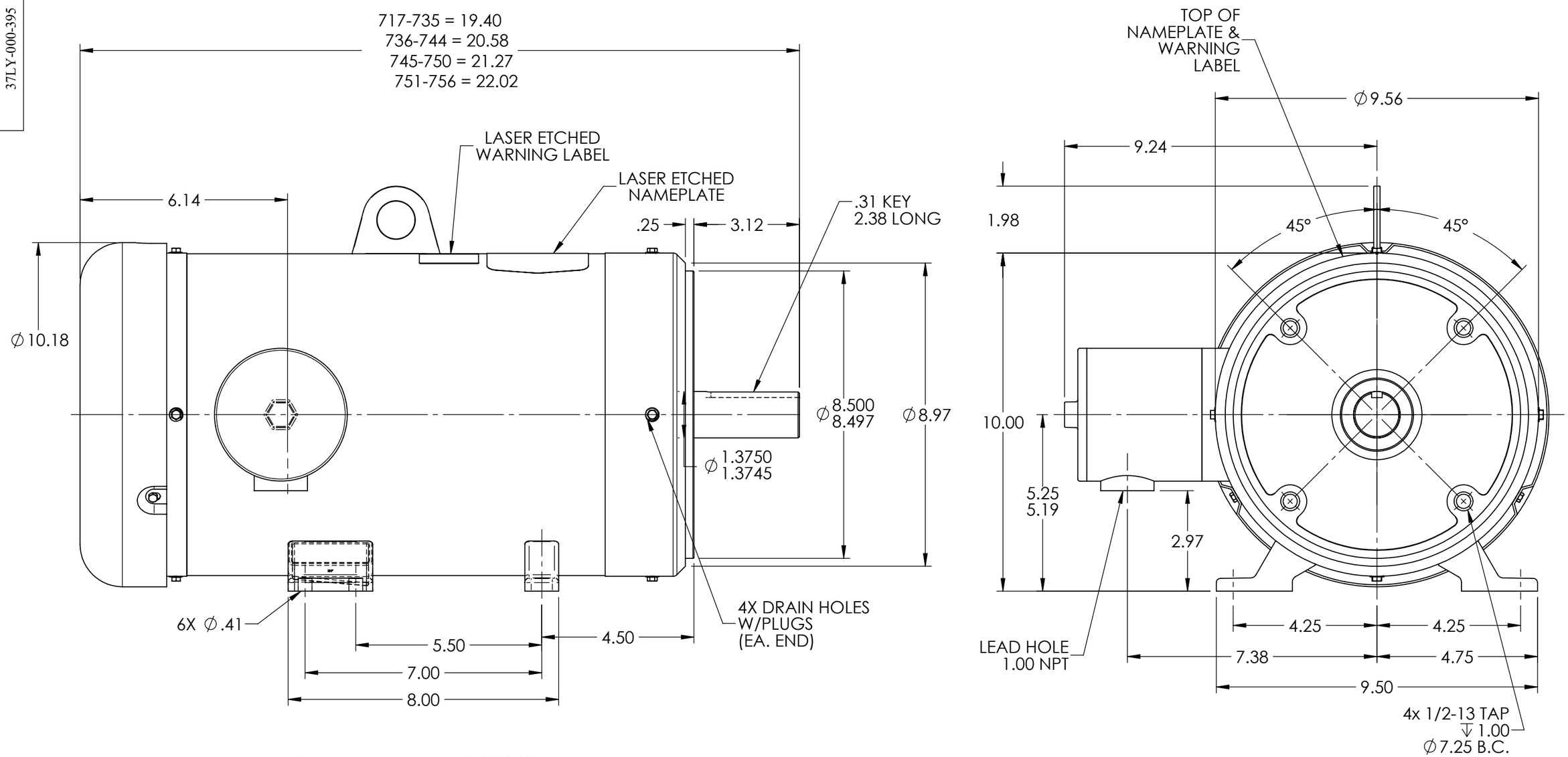

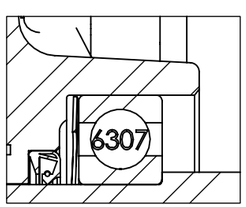

FRONT END DETAIL

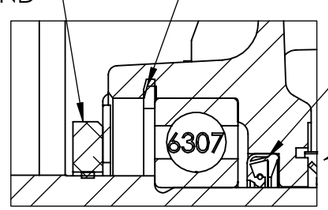

PULLEY END DETAIL

REV. DESC: REMOVE FACE DRAIN CALLOUT			
REV: B	VERSION: 02	REVISED: 02:29:02 11/12/2025	TDR: 000001266980
MODEL NO. 37LY-000-395			
BY: ENBILT0			B

BALDOR

STD HOR 213-5TC TEFC M WD11/12, AEGIS

37LY-000-395