ABB BALDOR RELIANCE

Customer information packet

CFSWDM3615T-E

5HP, 1750RPM, 3PH, 60HZ, 184TC, 3646M, TEFC, F1
Class - None
Division - Not Applicable

Copyright © All product information within this document is subject to ABB Motors and Mechanical Inc. copyright © protection, unless otherwise noted.
11/23/2026 3:28:56 AM

Specifications

Enclosure	TEFC
Frame	184TC
Frame Material	Stainless Steel
Frequency	60.00 Hz
Haz Area Class and Group	None
Haz Area Division	Not Applicable
Motor Letter Type	Three Phase
Output @ Frequency	5.000 HP @ 60 HZ
Phase	3
Synchronous Speed @ Frequency	1800 RPM @ 60 HZ
Voltage @ Frequency	460.0 V @ 60 HZ
	230.0 V @ 60 HZ
Agency Approvals	CSA
	NEMA PREMIUM
	UR
Ambient Temperature	40 °C
Auxiliary Box	NO AUXILLARY BOX
Auxiliary Box Lead Termination	None
Base Indicator	Rigid
Bearing Grease Type	Polyrex EM (-20F +300F)
Blower	None
Current @ Voltage	13.800 A @ 208.0 V
	6.500 A @ 460.0 V
	13.000 A @ 230.0 V
Design Code	B
Drip Cover	No Drip Cover
Duty Rating	CONT
Efficiency @ 100% Load	89.5 %
Electrically Isolated Bearing	Not Electrically Isolated
Feedback Device	NO FEEDBACK
Front Face Code	Standard
Front Shaft Indicator	None

Part Detail

Revision	N
Type	AC
Mech. spec.	36R552
Base	
Status	PRD/A
Elec. spec.	36WGS953
Layout	36LYR552
Eff. date	10-06-2025
CD Diagram	CD0005
Poles	04
Leads	9#16
Proprietary	False
Created date	08-02-2017

Heater Indicator	No Heater
High Voltage Full Load Amps	6.5 a
Insulation Class	H
Inverter Code	Inverter Ready
KVA Code	J
Lifting Lugs	Standard Lifting Lugs
Locked Bearing Indicator	Locked Bearing
Motor Lead Exit	Ko Box
Motor Lead Quantity/Wire Size	9 @ 16 AWG
Motor Lead Termination	Flying Leads
Motor Standards	NEMA
Motor Type	3646M
Mounting Arrangement	F1
Number of Poles	4
Overall Length	18.89 IN
Power Factor	81
Product Family	WD All SS Encapsulated
Pulley End Bearing Type	Sealed Bearing
Pulley Face Code	C-Face
Pulley Shaft Indicator	Standard
Rodent Screen	None
RoHS Status	ROHS COMPLIANT
Service Factor	1.15
Shaft Diameter	1.125 IN
Shaft Extension Location	Pulley End
Shaft Ground Indicator	No Shaft Grounding
Shaft Rotation	Reversible
Shaft Slinger Indicator	Shaft Slinger
Speed	1750 rpm
Speed Code	Single Speed
Starting Method	Direct on line
Thermal Device - Bearing	None
Thermal Device - Winding	None
Vibration Sensor Indicator	No Vibration Sensor

Winding Thermal 1	None
Winding Thermal 2	None

Nameplate

NP4427AAA01												
CAT #	CFSWDM3615T-E			**WT**	101	**LBS**						
SPEC	36R552S953G2			**ENCL**	TEFC							
SER #				**CC**	010A	**IP**	69					
HP	5			**MAG CUR**	5.8/2.9							
VOLTS	230/460					**NEMA NOM. EFF**	89.5					
AMPS	13/6.5					**PF**	81					
RATING	40C AMB-CONT											
RPM	1750				**MAX RPM**	2700						
FRAME	184TC	**HZ**	60	**CODE**	J	**CLASS**	H					
SER.F.	1.15	**SF AMP**	14.8/7.4			**PH**	3	**DES**	B			
DE	6206			**ODE**	6206							
LUBRICATION	POLYREX EM											
ID LOGO		**INVERTER TYPE**		**VPWM**		**CHP**	60	**TO**	90		1.5:1	
ID LOGO	**WK2**	0.428	**CT**	3	**TO**	60		20:1				
ID LOGO	**SL HZ**	1.7	**VT**	6	**TO**	60		1000:1				
						QR						
YR												

AC Induction Motor Performance Data
Record # 57384
Typical performance - not guaranteed values

Winding: 36WGS953-R006	**Type:** 3646M	**Enclosure:** TEFC

Nameplate Data				**460 V, 60 Hz: High Voltage Connection**	
Rated Output (HP)			5	**Full Load Torque**	15.03 LB-FT
Volts			230/460	**Start Configuration**	direct on line
Full Load Amps			13/6.5	**Breakdown Torque**	57.4 LB-FT
R.P.M.			1750	**Pull-up Torque**	28.9 LB-FT
Hz	60	**Phase**	3	**Locked-rotor Torque**	32.3 LB-FT
NEMA Design Code	B	**KVA Code**	J	**Starting Current**	47.9 A
Service Factor (S.F.)			1.15	**No-load Current**	2.91 A
NEMA Nom. Eff.	89.5	**Power Factor**	81	**Line-line Res. @ 25ºC**	2.34 Ω
Rating - Duty			40C AMB-CONT	**Temp. Rise @ Rated Load**	75°C
S.F. Amps				**Temp. Rise @ S.F. Load**	91°C
				Locked-rotor Power Factor	39
				Rotor inertia	0.428 lb-ft²

Load Characteristics 460 V, 60 Hz, 5 HP

% of Rated Load	**25**	**50**	**75**	**100**	**125**	**150**	**S.F.**
Power Factor	42	64	75	90	83	84	86
Efficiency	86.7	90.5	90.8	89.3	88.4	86.6	88.8
Speed	1788	1776	1763	1748	1732	1714	1738
Line amperes	3.27	4.1	5.2	6.53	8.02	9.69	7.42

ABB Motors and Mechanical Inc.

WINDING # 36WGS953

5 HP 3 PH 60 HZ 1750 RPM 460 V 3646M

Typical performance - not guaranteed values.

TORQUES(LB-FT): PO=57.4 PU=28.9 LR=32.3 LRA=47.9

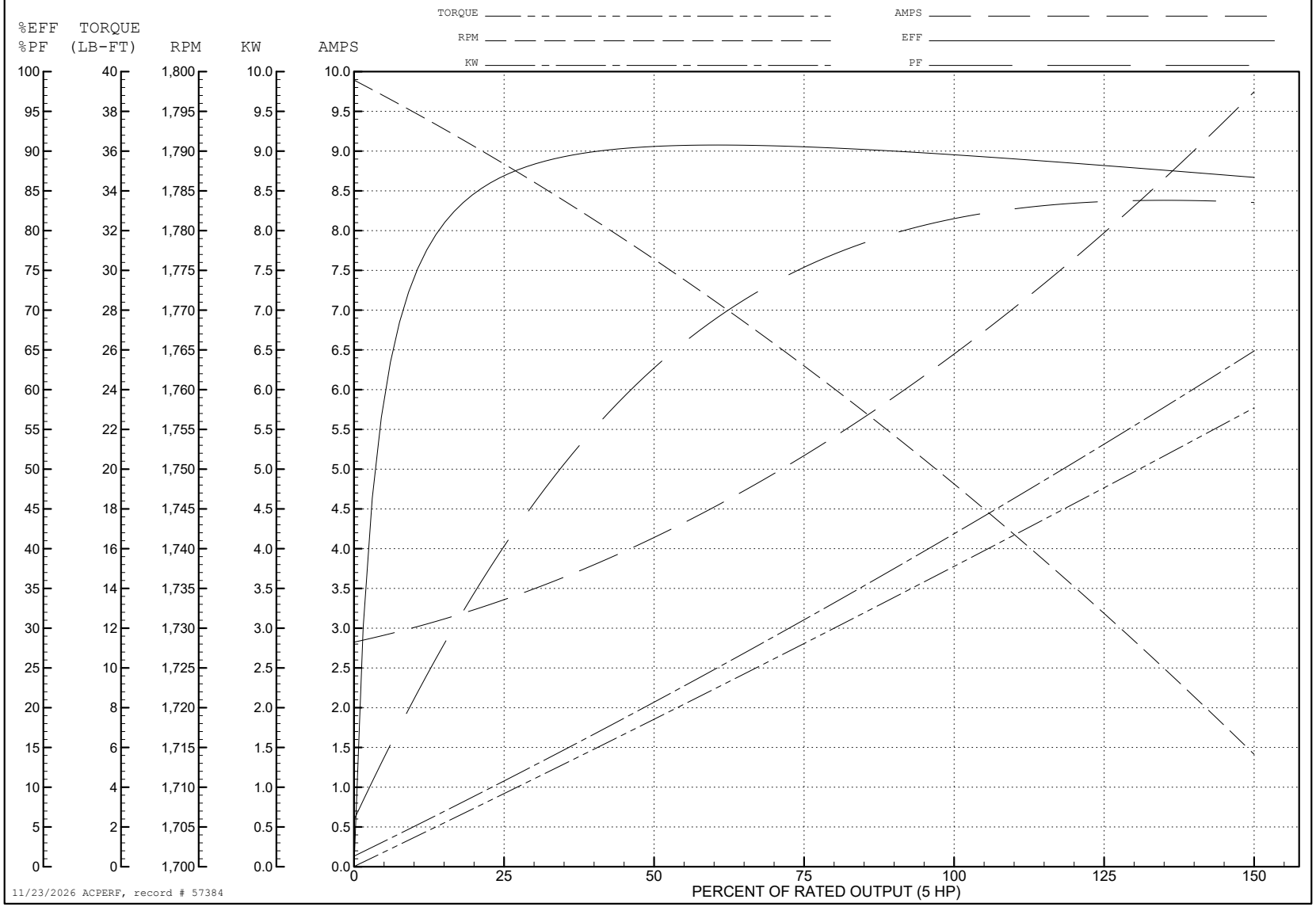

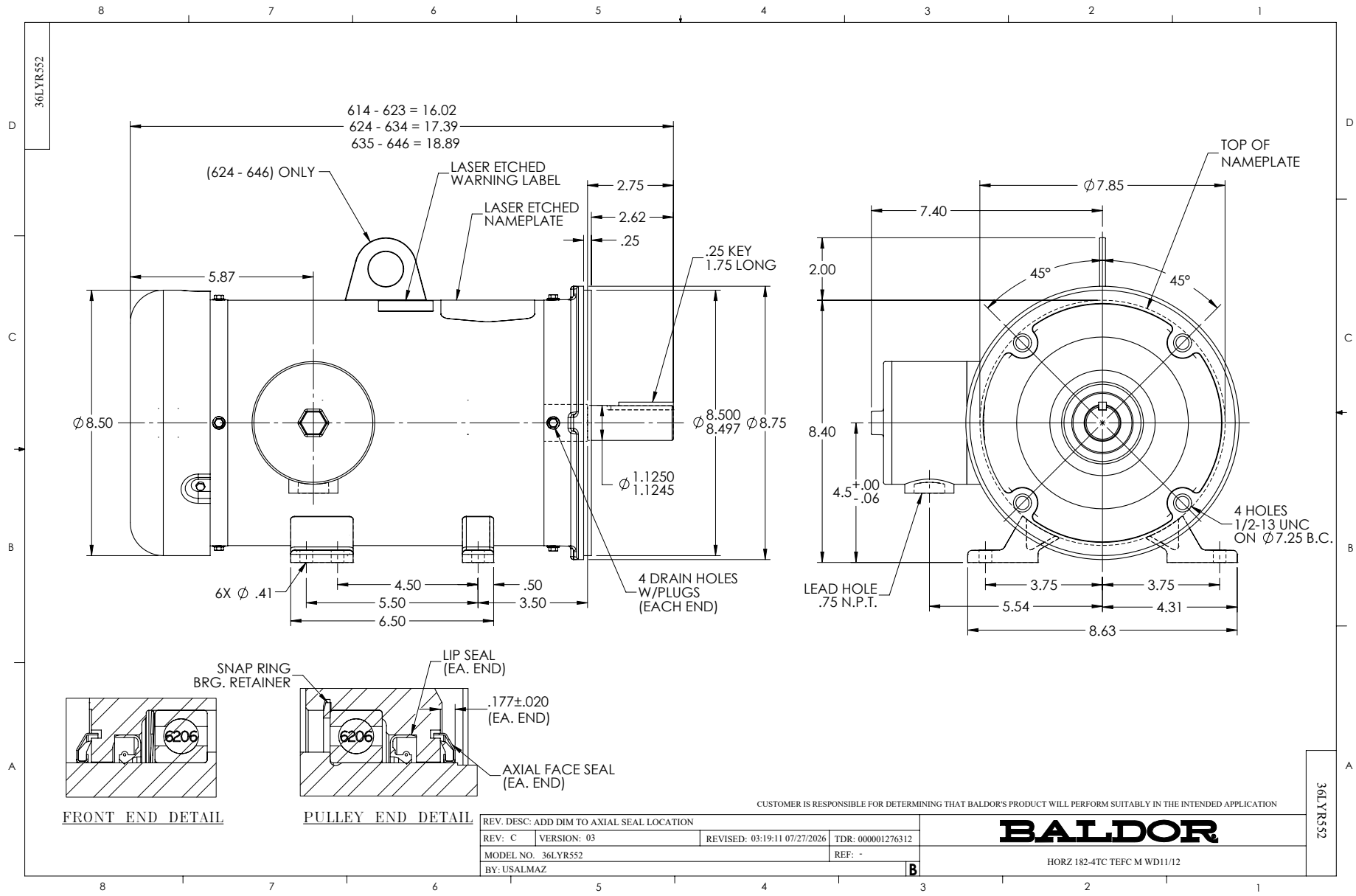
36LYR552
614 - 623 = 16.02
624 - 634 = 17.39
635 - 646 = 18.89
(624 - 646) ONLY
LASER ETCHED WARNING LABEL
LASER ETCHED NAMEPLATE
2.75
2.62
.25
.25 KEY 1.75 LONG
5.87
Ø8.50
Ø8.500 Ø8.497
Ø8.75
Ø1.1250 1.1245
6X Ø .41
4.50
.50
5.50
3.50
6.50
4 DRAIN HOLES W/PLUGS (EACH END)
TOP OF NAMEPLATE
Ø7.85
7.40
2.00
45°
45°
8.40
4.5 +.00 -.06
LEAD HOLE .75 N.P.T.
4 HOLES 1/2-13 UNC ON Ø7.25 B.C.
3.75
3.75
5.54
4.31
8.63
SNAP RING BRG. RETAINER
LIP SEAL (EA. END)
.177±.020 (EA. END)
AXIAL FACE SEAL (EA. END)
6206
6206
FRONT END DETAIL
PULLEY END DETAIL
CUSTOMER IS RESPONSIBLE FOR DETERMINING THAT BALDOR'S PRODUCT WILL PERFORM SUITABLY IN THE INTENDED APPLICATION
REV. DESC: ADD DIM TO AXIAL SEAL LOCATION
REV: C VERSION: 03 REVISED: 03:19:11 07/27/2026 TDR: 000001276312
MODEL NO. 36LYR552 REF: -
BY: USALMAZ B
BALDOR
HORZ 182-4TC TEFC M WD11/12
36LYR552

CD0005

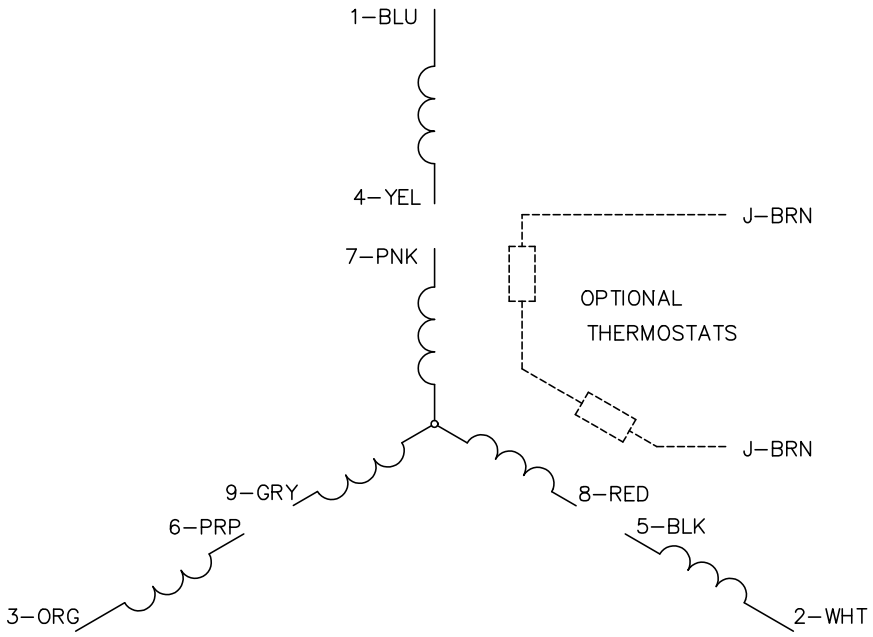

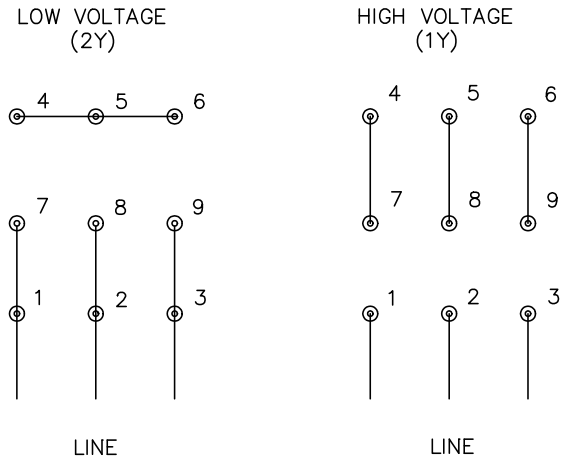

NOTES:

1. INTERCHANGE ANY TWO LINE LEADS TO REVERSE ROTATION.
2. OPTIONAL THERMOSTATS ARE PROVIDED WHEN SPECIFIED.
3. ACTUAL NUMBER OF INTERNAL PARALLEL CIRCUITS MAY BE A MULTIPLE OF THOSE SHOWN ABOVE.
4. LEAD COLORS ARE OPTIONAL. LEADS MUST ALWAYS BE NUMBERED AS SHOWN.

CD0005

REV. DESC: REVISE TO SHOW OPTIONAL COLORS			BALDOR ELECTRIC Co.
REV. LTR: E	BY: JLP	REVISED: 01/19/99 10:15	TDR: 0171435
CD0005		FILE: AAA00005140	MDL: –
		MTL: –	3PH, DV, 9 LEADS