ABB BALDOR RELIANCE

Customer information packet

CFSWDM3558T-5E

2HP, 1765RPM, 3PH, 60HZ, 145TC, 3528M, TEFC, F1
Class - None
Division - Not Applicable

Copyright © All product information within this document is subject to ABB Motors and Mechanical Inc. copyright © protection, unless otherwise noted.
11/23/2026 3:26:45 AM

Specifications

Enclosure	TEFC
Frame	145TC
Frame Material	Stainless Steel
Frequency	60.00 Hz
Haz Area Class and Group	None
Haz Area Division	Not Applicable
Motor Letter Type	Three Phase
Output @ Frequency	2.000 HP @ 60 HZ
Phase	3
Synchronous Speed @ Frequency	1800 RPM @ 60 HZ
Voltage @ Frequency	575.0 V @ 60 HZ
Agency Approvals	CSA EEV
	WEEE
	NEMA_PREMIUM
	NEMA PREMIUM
	CURUSEEV
Ambient Temperature	40 °C
Auxiliary Box	NO AUXILLARY BOX
Auxiliary Box Lead Termination	None
Base Indicator	Rigid
Bearing Grease Type	Polyrex EM (-20F +300F)
Blower	None
Current @ Voltage	2.150 A @ 575.0 V
Design Code	B
Drip Cover	No Drip Cover
Duty Rating	CONT
Efficiency @ 100% Load	86.5 %
Electrically Isolated Bearing	Not Electrically Isolated
Feedback Device	NO FEEDBACK
Front Shaft Indicator	None
Heater Indicator	No Heater
High Voltage Full Load Amps	2.2 a

Part Detail

Revision	A
Type	AC
Mech. spec.	35E4743
Base	
Status	PRD/A
Elec. spec.	35WGZ823
Layout	35LYE4743
Eff. date	08-14-2023
CD Diagram	CD0006
Poles	04
Leads	3#18
Proprietary	False
Created date	03-11-2022

Insulation Class	H
Inverter Code	Inverter Duty
KVA Code	L
Lifting Lugs	No Lifting Lugs
Locked Bearing Indicator	Locked Bearing
Max Speed	2700 rpm
Motor Finish	UNPAINTED
Motor Lead Quantity/Wire Size	3 @ 18 AWG
Motor Lead Termination	Flying Leads
Motor Standards	NEMA
Motor Type	3528M
Mounting Arrangement	F1
Number of Poles	4
Overall Length	14.03 IN
Power Factor	81
Product Family	WD All SS Encapsulated
Pulley End Bearing Type	Sealed Bearing
Pulley Face Code	C-Face
Pulley Shaft Indicator	Standard
Rodent Screen	None
Service Factor	1.15
Shaft Diameter	0.875 IN
Shaft Ground Indicator	No Shaft Grounding
Shaft Rotation	Reversible
Shaft Slinger Indicator	No Slinger
Speed	1765 rpm
Speed Code	Single Speed
Starting Method	Direct on line
Thermal Device - Bearing	None
Thermal Device - Winding	None
Vibration Sensor Indicator	No Vibration Sensor
Winding Thermal 1	None
Winding Thermal 2	None

Nameplate

NP4427AAA02												
CAT #	CFSWDM3558T-5E				**LBS**							
SPEC	35E4743Z823G1				**ENCL**	TEFC						
SER #					**CC**	010A	**IP**	69				
HP	2			**MAG CUR**	1.15							
VOLTS	575						**NEMA NOM. EFF**	86.5				
AMPS	2.15					**PF**	81					
RATING	40C AMB-CONT											
RPM	1765				**MAX RPM**	2700						
FRAME	145TC	**HZ**	60		**CODE**	L	**CLASS**	H				
SER.F.	1.15	**SF AMP**	2.45			**PH**	3	**DES**	B			
DE	6205		**ODE**	6205								
LUBRICATION	POLYREX EM											
ID LOGO	**INVERTER TYPE**		**VPWM**		**CHP**	60	**TO**	90	1.5:1			
ID LOGO	**WK2**	0.202	**CT**	15	**TO**	60	4:1					
ID LOGO	**SL HZ**	1.2	**VT**	3	**TO**	60	20:1					
										QR		
YR												

AC Induction Motor Performance Data
Record # 88444
Preliminary Data Sheet

Winding: 35WGZ823-R001	**Type:** 3528M	**Enclosure:** TEFC

Nameplate Data				**575 V, 60 Hz: Single Voltage Motor**	
Rated Output (HP)			2	**Full Load Torque**	5.95 LB-FT
Volts			575	**Start Configuration**	direct on line
Full Load Amps			2.15	**Breakdown Torque**	22.1 LB-FT
R.P.M.			1765	**Pull-up Torque**	13.1 LB-FT
Hz	60	**Phase**	3	**Locked-rotor Torque**	15.85 LB-FT
NEMA Design Code	B	**KVA Code**	K	**Starting Current**	18.31 A
Service Factor (S.F.)			1.15	**No-load Current**	1.15 A
NEMA Nom. Eff.	86.5	**Power Factor**	81	**Line-line Res. @ 25ºC**	15.5 Ω
Rating - Duty			40C AMB-CONT	**Temp. Rise @ Rated Load**	81°C
S.F. Amps			2.45	**Temp. Rise @ S.F. Load**	98°C
				Locked-rotor Power Factor	57
				Rotor inertia	0.202 lb-ft²

Load Characteristics 575 V, 60 Hz, 2 HP

% of Rated Load	**25**	**50**	**75**	**100**	**125**	**150**	**S.F.**
Power Factor	39	60	73	80	84	86	82
Efficiency	80.1	86.2	87.3	86.9	85.6	83.9	86.1
Speed	1791	1783	1773	1765	1755	1742	1759
Line amperes	1.23	1.45	1.76	2.15	2.62	3.1	2.43

ABB Motors and Mechanical Inc.

WINDING # 35WGZ823

2 HP 3 PH 60 HZ 1765 RPM 575 V 3528M

Typical performance - not guaranteed values.

TORQUES(LB-FT): PO=22.1 PU=13.1 LR=15.85 LRA=18.31

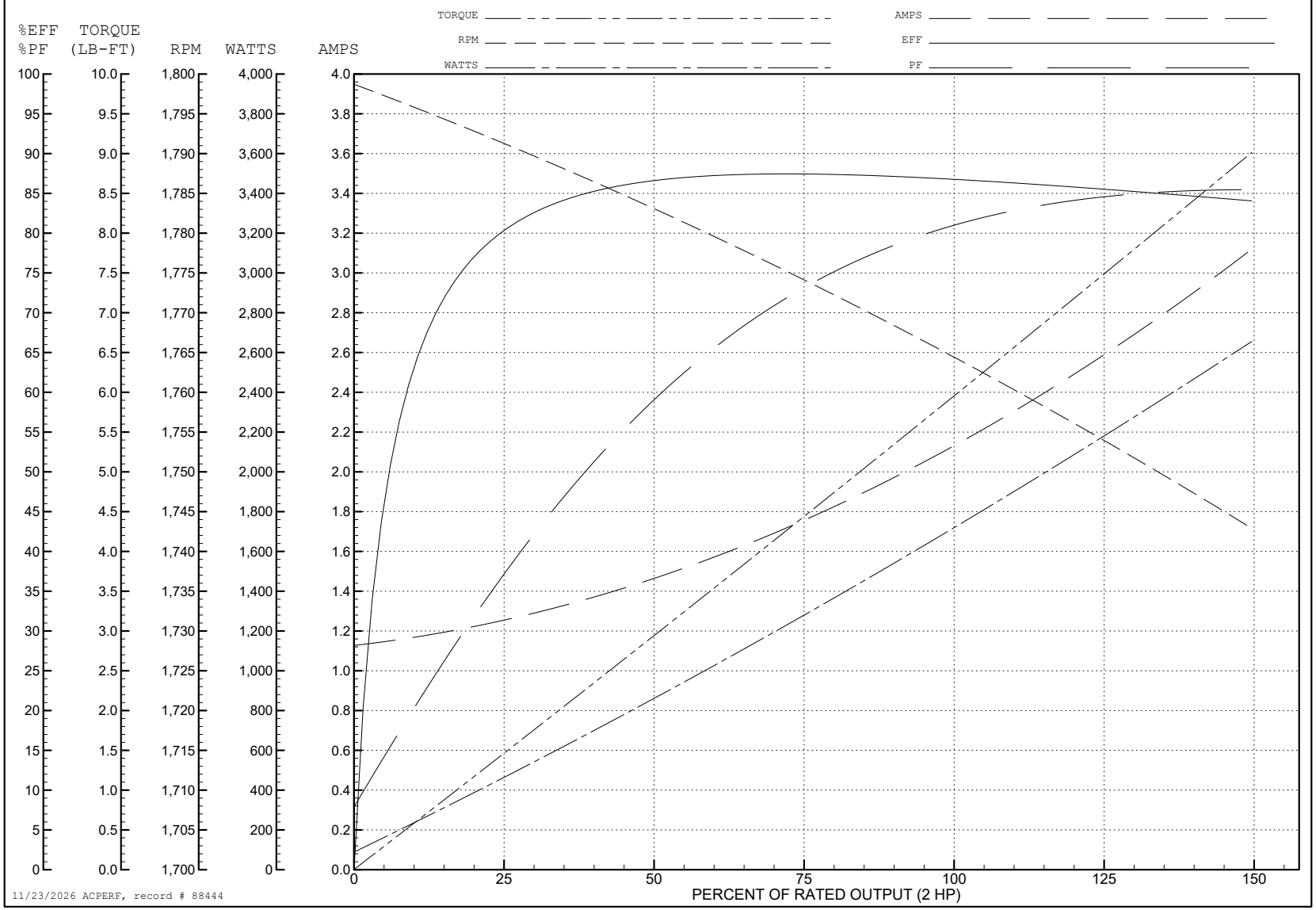

35LYE4743

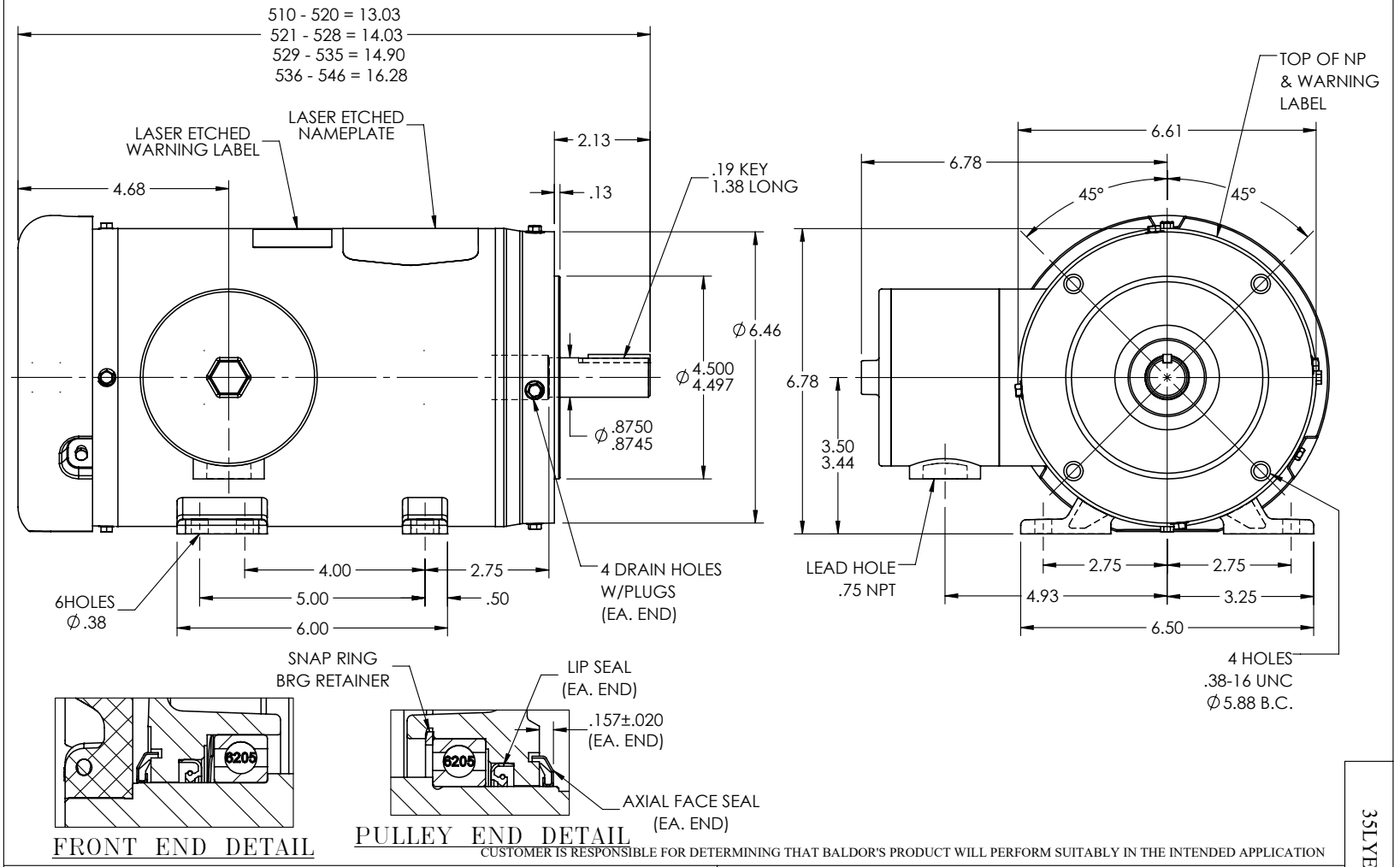

FRONT END DETAIL

PULLEY END DETAIL

CUSTOMER IS RESPONSIBLE FOR DETERMINING THAT BALDOR'S PRODUCT WILL PERFORM SUITABLY IN THE INTENDED APPLICATION

REV. DESC: ADD DIM TO AXIAL SEAL LOCATION			
REV: E	VERSION: 05	REVISED: 01:08:57 07/23/2026	TDR: 000001276312
35LYE4743	MODEL NO. 35LYE4743		REF: -
	BY: USALMAZ		STD HORZ 143-5TC TEFC 35M WD11/12

BALDOR

35LYE4743

CD0006

TYPICAL WYE–CONNECTED MOTOR

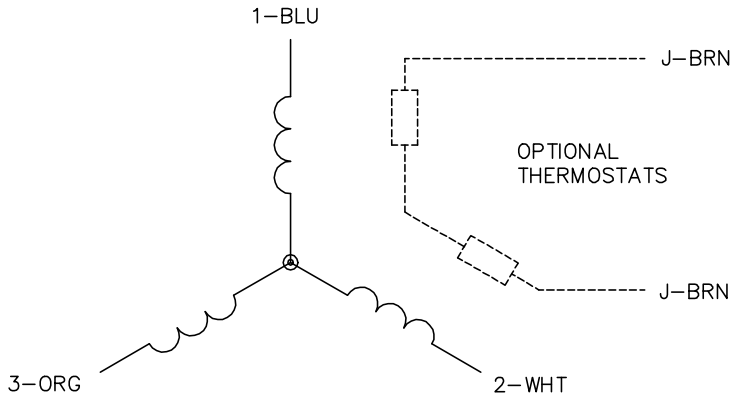

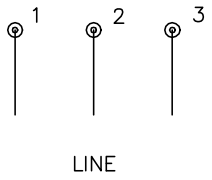

TYPICAL DELTA–CONNECTED MOTOR

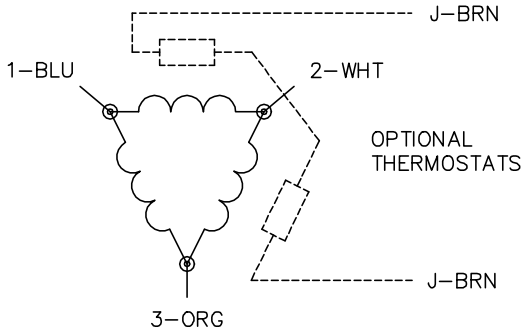

NOTES:

1. THREE LEAD MOTOR MAY BE EITHER WYE CONNECTED OR DELTA CONNECTED.
2. INTERCHANGE ANY TWO LINE LEADS TO REVERSE ROTATION.
3. OPTIONAL THERMOSTATS ARE PROVIDED WHEN SPECIFIED.
4. ACTUAL NUMBER OF INTERNAL PARALLEL CIRCUITS MAY VARY.
5. LEAD COLORS ARE OPTIONAL. LEADS MUST BE NUMBERED AS SHOWN.

CD0006

REV. DESC: ADD CLASS CONN00000007			BALDOR - RELIANCE®
REV. LTR: E	VERSION: 01	TDR: 000001099922	
FILE: \AAA\00005\141	REVISED: 10:24:49 02/19/2019	BY: ENBRIR0	3PH, SV, 3 LEADS, WYE OR DELTA CONNECTED
MTL: –			SH 1 of 1