34LYM371

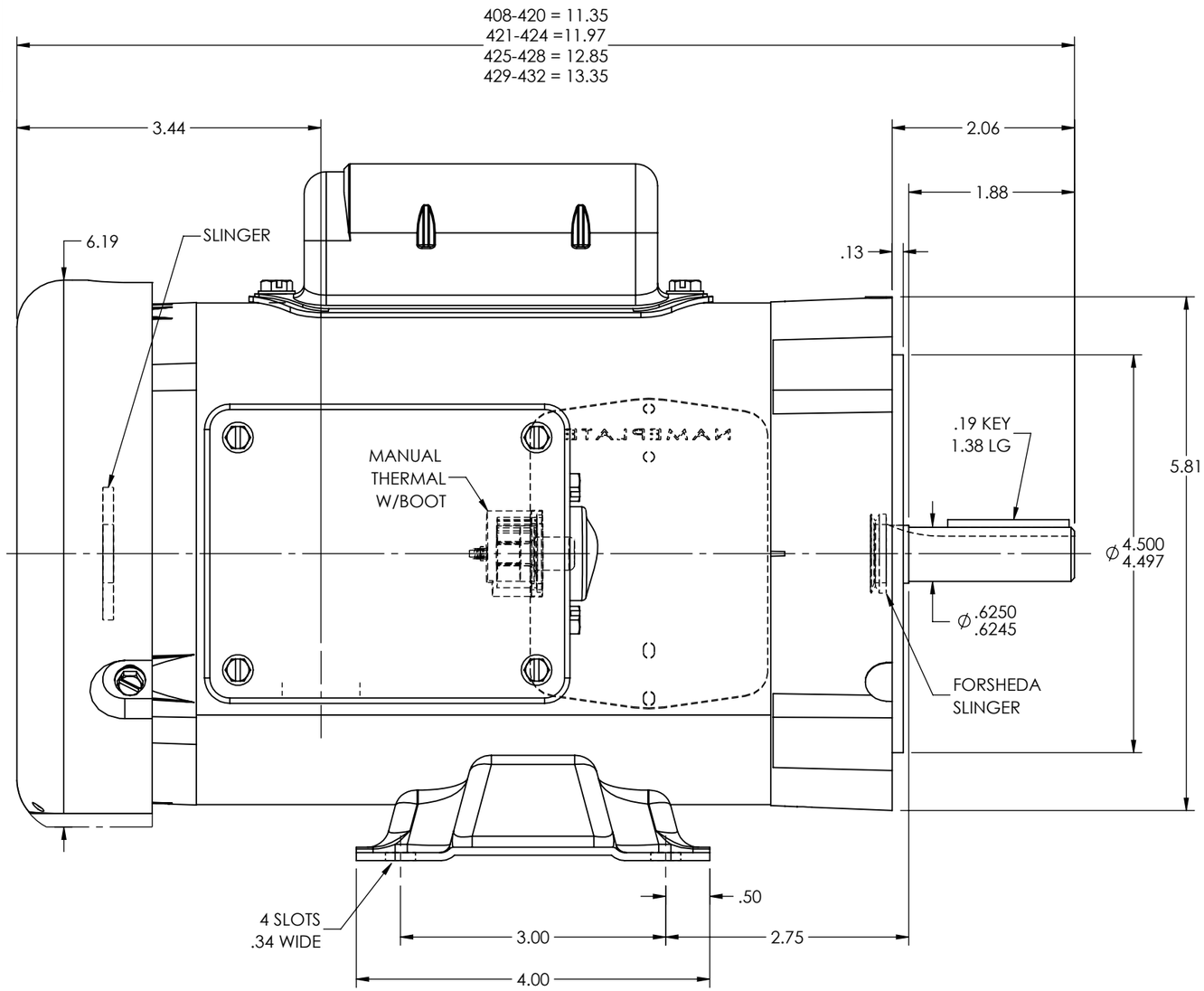

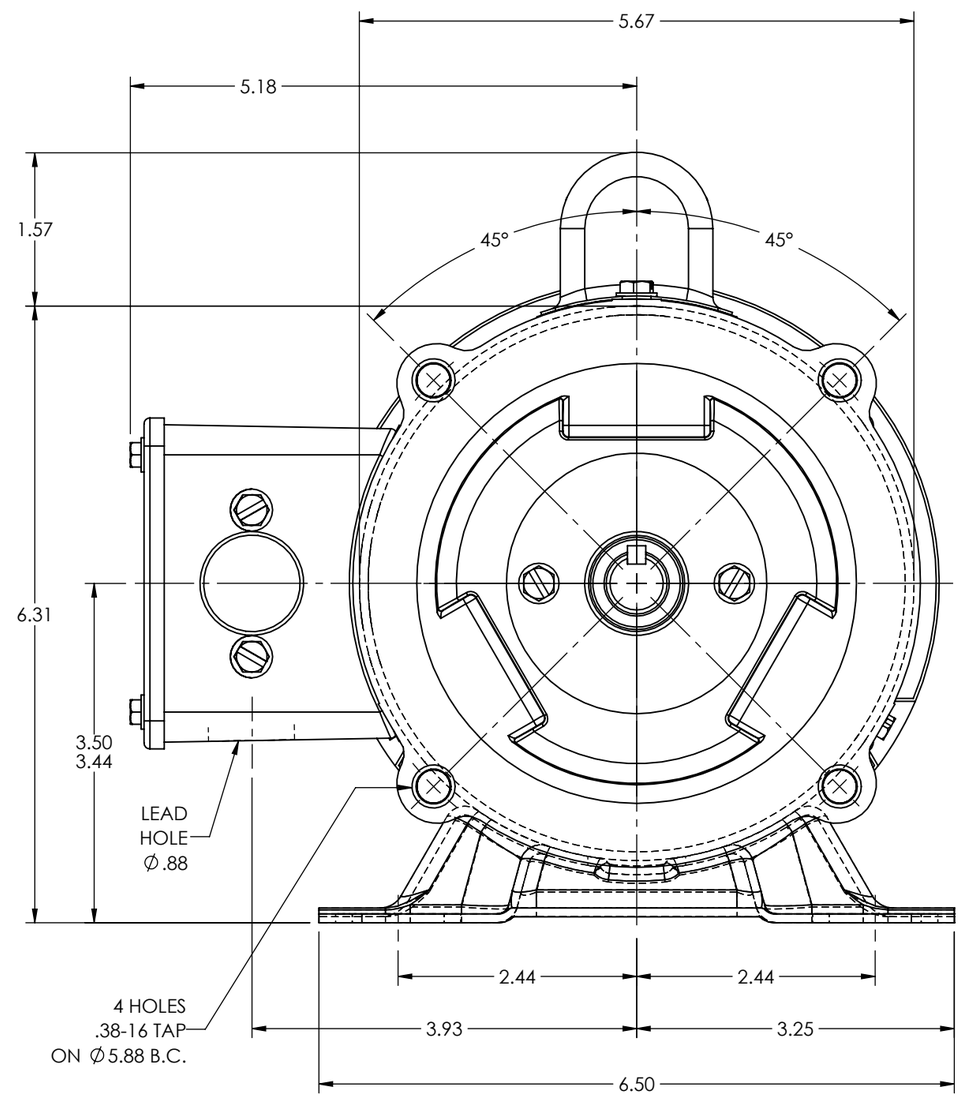

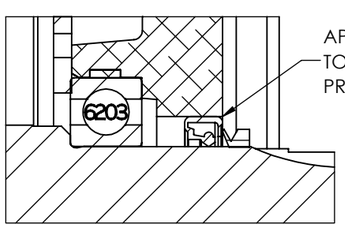

PULLEY END DETAIL

CUSTOMER IS RESPONSIBLE FOR DETERMINING THAT THE PRODUCT WILL PERFORM SUITABLY IN THE INTENDED APPLICATION

REV. DESC: ADDED KOBX LEAD HOLE TO PRINT			
REV: D	VERSION: 04	REVISED: 10:30:01 09/04/2025	TDR: 000001262810
MODEL NO. 34LYM371			REF: -
BY: ENJEFD0			B

BALDOR - RELIANCE®

HOR 34L NEMA 56C TEFC W/ MTO IN KOBX, (FARM DUTY)

34LYM371