35LYT964

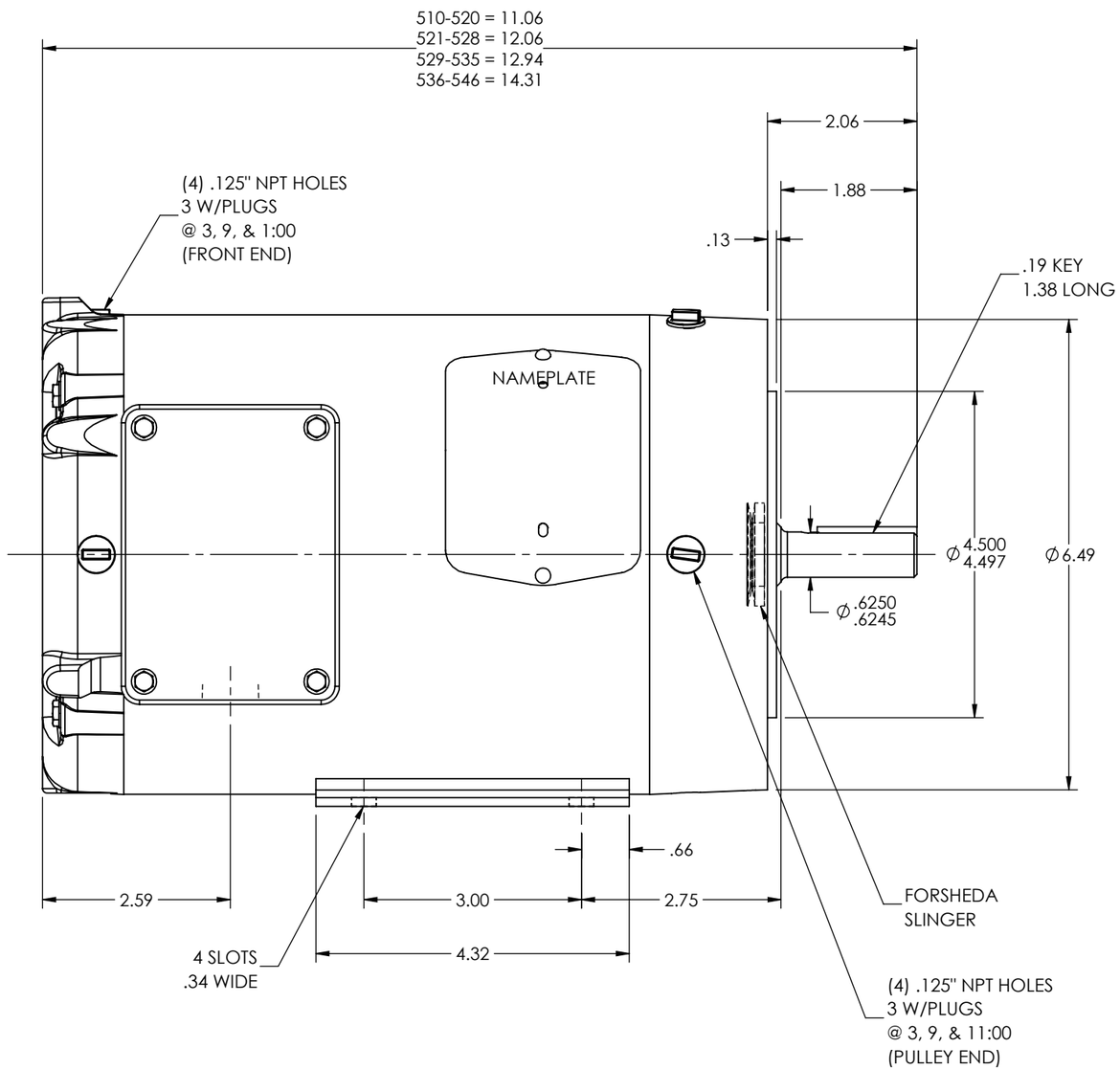

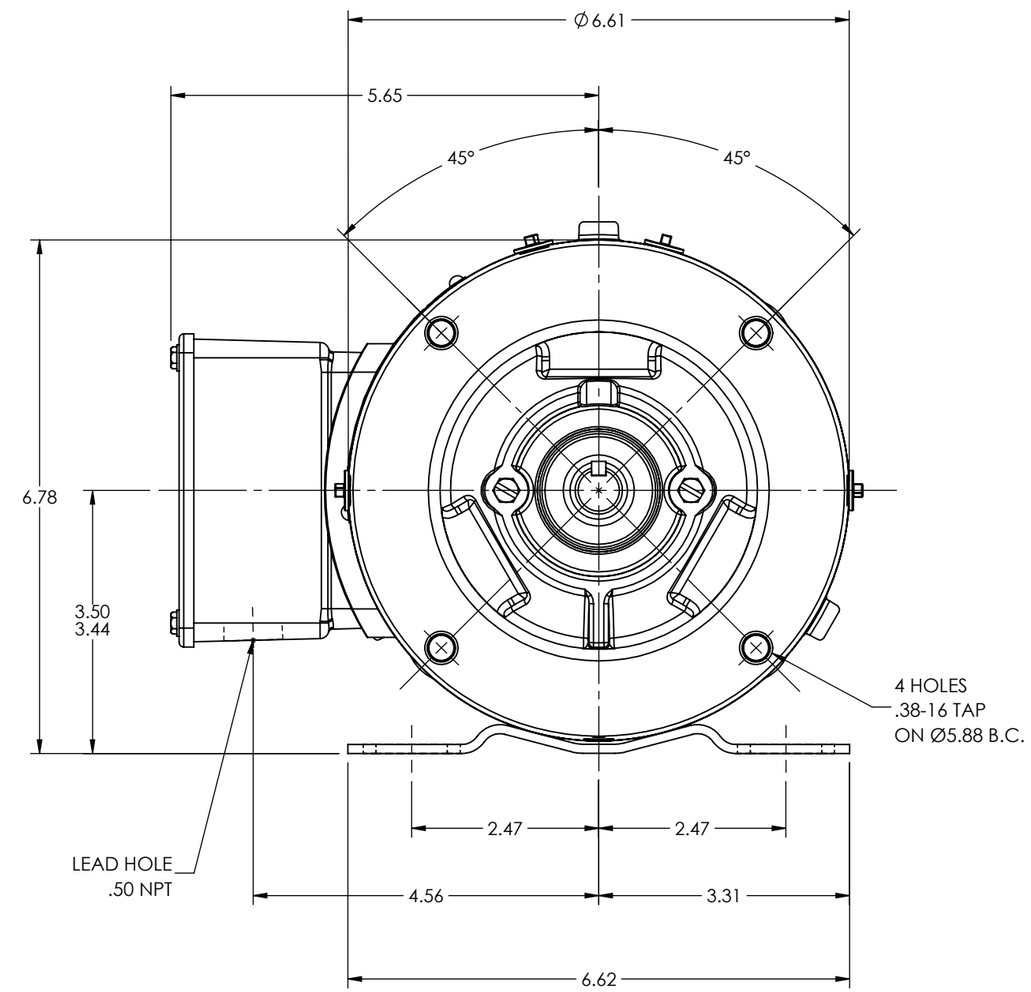

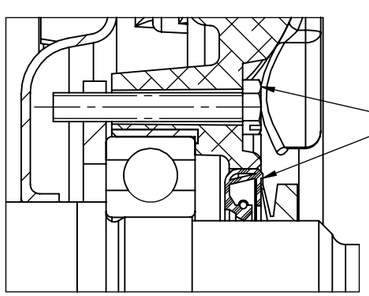

PULLEY END DETAIL

CUSTOMER IS RESPONSIBLE FOR DETERMINING THAT THE PRODUCT WILL PERFORM SUITABLY IN THE INTENDED APPLICATION

REV. DESC: UPDATE 3D MODEL BOM PER REV T, NO CHG TO 2D PRINT			
REV: K	VERSION: 10	REVISED: 02:08:43 03/14/2022	TDR: 000001187335
MODEL NO. 35LYT964			REF: -
BY: USBUFRA			B

BALDOR - RELIANCE®

HORZ 56C TENV 35M WD (S/P9), 2 POLE "W" BASE

SH 1 OF 1

35LYT964