ABB BALDOR RELIANCE

Customer information packet

CEWDM4310T

60HP, 3560RPM, 3PH, 60HZ, 364TSC, TEFC, F1
Class - None
Division - Not Applicable

Copyright © All product information within this document is subject to ABB Motors and Mechanical Inc. copyright © protection, unless otherwise noted.
11/27/2026 4:21:00 AM

Specifications

Enclosure	TEFC
Frame	364TSC
Frame Material	Iron
Frequency	60.00 Hz
Haz Area Class and Group	None
Haz Area Division	Not Applicable
Motor Letter Type	Three Phase
Output @ Frequency	60.000 HP @ 60 HZ
Phase	3
Synchronous Speed @ Frequency	3600 RPM @ 60 HZ
Voltage @ Frequency	230.0 V @ 60 HZ
	460.0 V @ 60 HZ
Agency Approvals	CSA EEV
	CCSA US
Ambient Temperature	40 °C
Auxiliary Box	NO AUXILLARY BOX
Base Indicator	Rigid
Bearing Grease Type	Polyrex EM (-20F +300F)
Current @ Voltage	66.100 A @ 460.0 V
	132.000 A @ 230.0 V
Design Code	B
Drip Cover	No Drip Cover
Duty Rating	CONT
Efficiency @ 100% Load	93.6 %
Enclosure Modification	Severe Duty Features
Feedback Device	NO FEEDBACK
Heater Indicator	No Heater
High Voltage Full Load Amps	66.1 a
Insulation Class	F
Inverter Code	Inverter Ready
IP Rating	IP55
KVA Code	G

Part Detail

Revision	A
Type	AC
Mech. spec.	
Base	
Status	PRD/A
Elec. spec.	A36WG1558
Layout	617428-135
Eff. date	10-01-2021
CD Diagram	416820-002
Poles	02
Leads	3#4,6#6
Proprietary	False
Created date	08-22-2019

Lifting Lugs	Standard Lifting Lugs
Motor Lead Quantity/Wire Size	3 @ 4 AWG
Motor Standards	NEMA
Motor Type	A36056M
Mounting Arrangement	F1
Number of Poles	2
Overall Length	31.35 IN
Power Factor	91
Product Family	Washdown Features
Pulley End Bearing Type	Ball
Pulley Face Code	C-Face
Service Factor	1.15
Shaft Diameter	1.875 IN
Shaft Ground Indicator	No Shaft Grounding
Shaft Rotation	Reversible
Shaft Slinger Indicator	Shaft Slinger
Speed	3560 rpm
Speed Code	Single Speed
Starting Method	Direct on line
Thermal Device - Bearing	None
Thermal Device - Winding	None

Nameplate

NP2496L
MOBIL POLYREX EM

NP2428L												
SPEC NO.	A36-7816-1558	**CAT.NO.**	CEWDM4310T						**FRAME**	364TSC		
HP	60	**VOLTS**	230/460	**PHASE**	3	**DESIGN**	B	**TYPE**	P			
RPM	3560	**AMPS**	132/66.1	**HZ**	60	**AMB**	40	**SF**	1.15			
DRIVE END BEARING	65BC03JGG30A	**DUTY**	CONT	**INSUL.CLASS**	F							
OPP D.E. BEARING	65BC03JGG30A	**ENCL**	TEFC	**CODE**	G							
SER.NO.		**POWER FACTOR**	91			**NEMA-NOM-EFFICIENCY**	93.6					
						MAX CORR KVAR	5	**GUARANTEED EFFICIENCY**	92.4			
	IP55					**NEMA NOM/CSA QUOTED EFF**						
	10:1CT AND 10:1VT ON VPWM INVE					RTER, 1.00SF		**MOTOR WEIGHT**	918			

REL. S.O.	FRAME	HP	TYPE	PHASE/ HERTZ	RPM	VOLTS
	364TS	60	P	3/60	3560	230/460

AMPS	DUTY	AMB °C/ INSUL.	S.F.	NEMA DESIGN	CODE LETTER	ENCL.
132/66.1	CONT	40/F	1.15	B	G	TEFC

E/S	ROTOR	TEST S.O.	TEST DATE	STATOR RES.@25 °C OHMS (BETWEEN LINES)
491281	418141005XE	---	---	.0254/.101

PERFORMANCE

LOAD	HP	AMPERES	RPM	% POWER FACTOR	% EFFICIENCY
NO LOAD	0	14.0	3600	13.0	0
1/4	15.0	21.3	3590	74.9	87.8
2/4	30.0	34.5	3580	88.3	92.4
3/4	45.0	49.7	3569	90.8	93.5
4/4	60.0	66.1	3558	90.8	93.6
5/4	75.0	83.0	3546	90.7	93.3

SPEED TORQUE

	RPM	TORQUE % FULL LOAD	TORQUE LB.-FT.	AMPERES
LOCKED ROTOR	0	203	180	435
PULL UP	1565	175	155	355
BREAKDOWN	3397	231	205	212
FULL LOAD	3558	100	88.6	66.1

AMPERES SHOWN FOR 460. VOLT CONNECTION. IF OTHER VOLTAGE CONNECTIONS ARE AVAILABLE, THE AMPERES WILL VARY INVERSELY WITH THE RATED VOLTAGE

REMARKS: TYPICAL DATA
XE MOTOR-NEMA NOM. EFF. 93.6 %
GUARANTEED MIN. EFF. 92.4%

BALDOR
A MEMBER OF THE ABB GROUP

DR. BY W. L. SMITH
CK. BY G. R. WEBB
APP. BY E.J.CHRISTIAN
DATE 03/11/02

A-C MOTOR PERFORMANCE DATA A36WG1558-R007
ISSUE DATE 08/30/19

REL S.O.	RPM 3560	S.F. 1.15	ROTOR 418141005XE
FRAME 364TS	VOLTS 230/460	NEMA DESIGN B	TEST S.O. TYPICAL DATA
HP 60	AMPS 132/66.1	CODE LETTER G	TEST DATE ---
TYPE P	DUTY CONT	ENCLOSURE TEFC	STATOR RES.@ 25 °C .0254/.101
PHASE/HERTZ 3/60	AMB °C/INSUL 40/F	E/S 491281	OHMS (BETWEEN LINES)

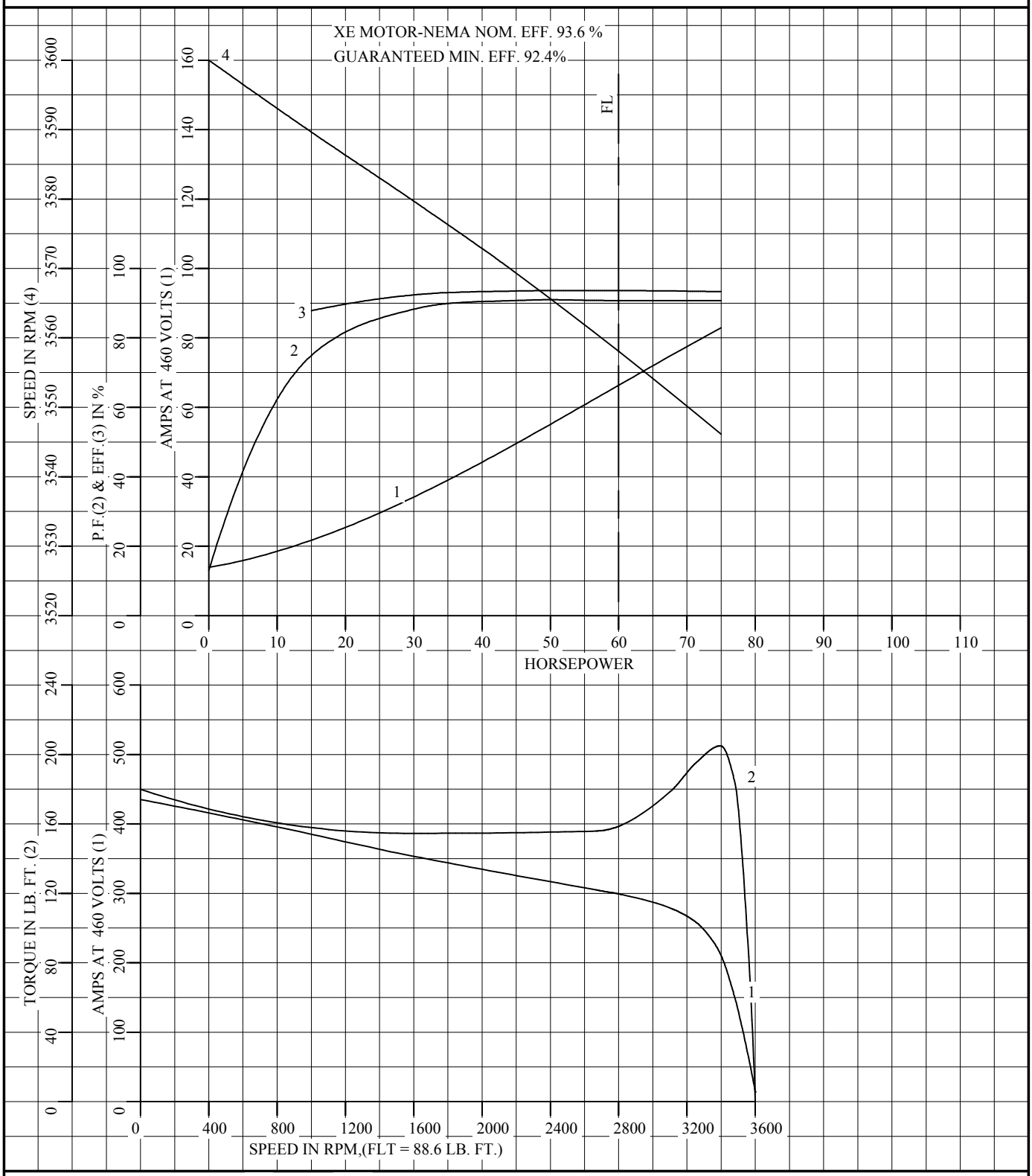

AMPERES SHOWN FOR 460 VOLT CONNECTION, IF OTHER VOLTAGE CONNECTIONS ARE AVAILABLE, THE AMPERES WILL VARY INVERSELY WITH THE RATED VOLTAGE.

BALDOR A MEMBER OF THE ABB GROUP

DR. BY	W. L. SMITH
CK. BY	G. R. WEBB
APP. BY	E.J.CHRISTIAN
DATE	03/11/02

A-C MOTOR PERFORMANCE CURVES A36WG1558-R007 ISSUE DATE 08/30/19

REL. S.O.		RPM	3560	S.F.	1.15	ROTOR	418141005XE
FRAME	364TS	VOLTS	230/460	NEMA DESIGN	B	TEST S.O.	TYPICAL DATA
HP	60	AMPS	132/66.1	CODE LETTER	G	TEST DATE	---
TYPE	P	DUTY	CONT	ENCLOSURE	TEFC	STATOR RES.@ 25 ℃	.0254/.101
PHASE/HERTZ	3/60	AMB ℃/INSUL	40/F	E/S	491281		OHMS (BETWEEN LINES)

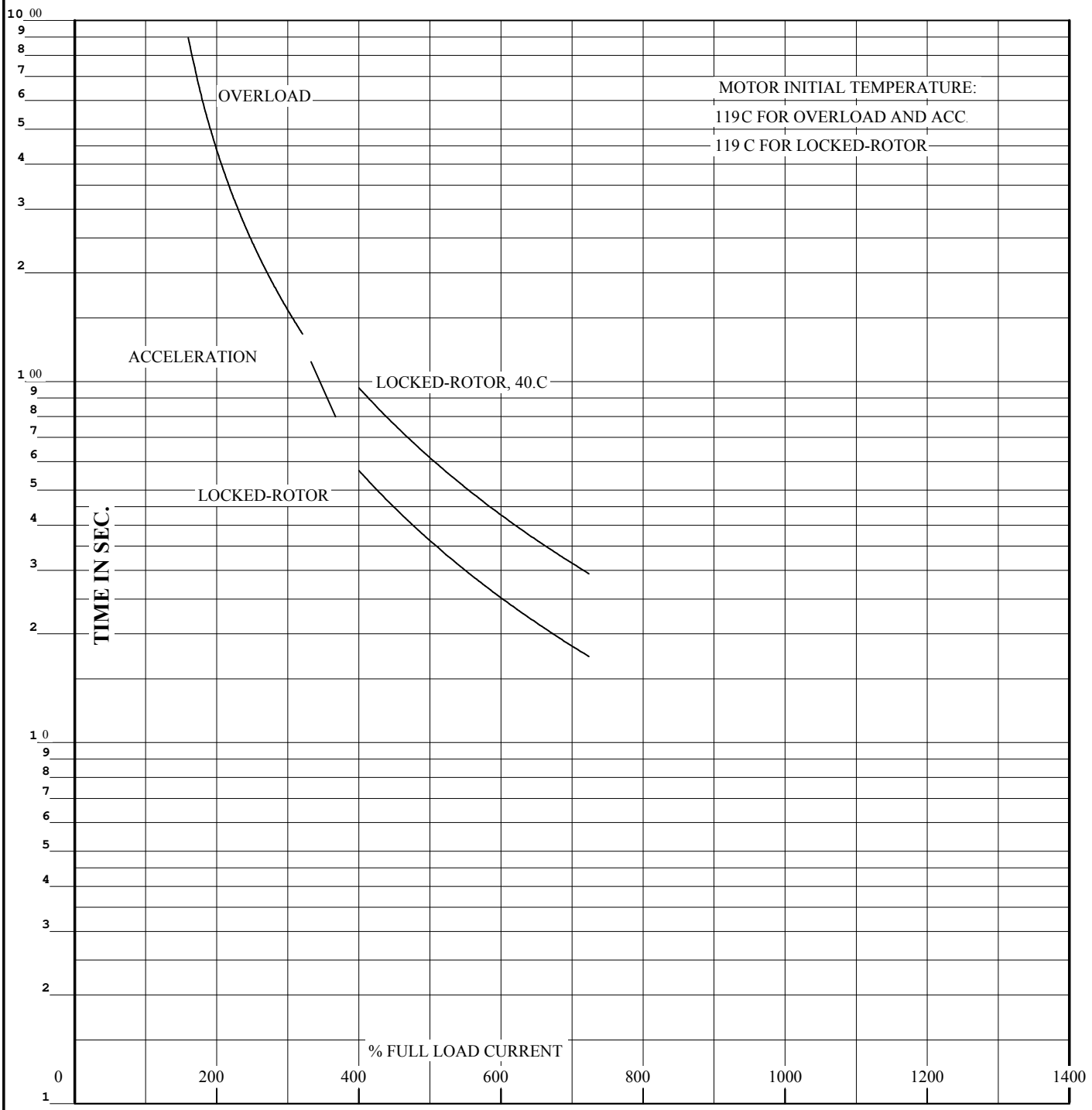

REMARKS:

THERMAL LIMIT CURVE

XE MOTOR-NEMA NOM. EFF. 93.6 %

GUARANTEED MIN. EFF. 92.4%

AMPERES SHOWN FOR 460 VOLT CONNECTION, IF OTHER VOLTAGE CONNECTIONS ARE AVAILABLE, THE AMPERES WILL VARY INVERSELY WITH THE RATED VOLTAGE.

BALDOR A MEMBER OF THE ABB GROUP

DR. BY	W. L. SMITH
CK. BY	G. R. WEBB
APP. BY	E.J.CHRISTIAN
DATE	03/11/02

A–C MOTOR PERFORMANCE CURVES

A36WG1558-R007

ISSUE DATE 08/30/19

DUTY MASTER ALTERNATING CURRENT MOTORS

617428-135

ENCLOSURE: TOTALLY ENCLOSED

SQUIRREL-CAGE INDUCTION

MOUNTING: FOOT, F-1 SIDE

E365TSC/E364TSC MOUNTING HOLES

COOLING: FAN COOLED

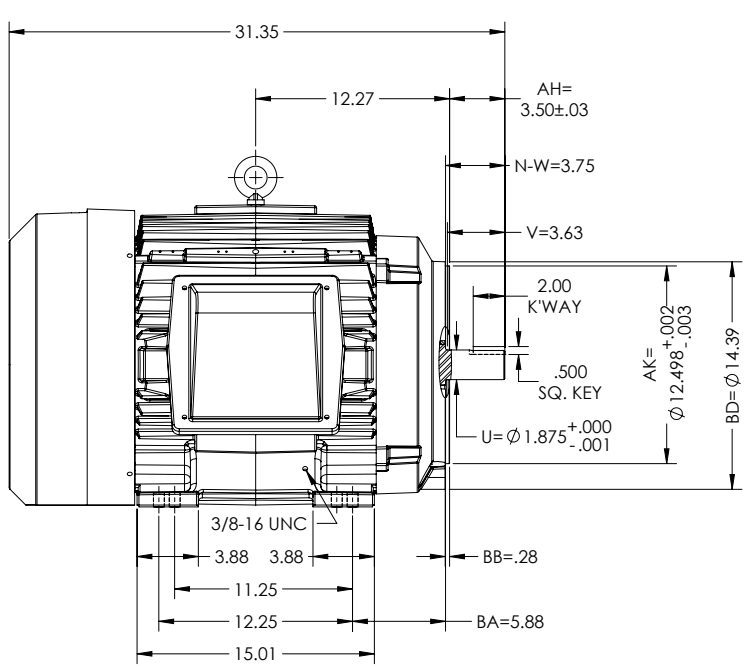

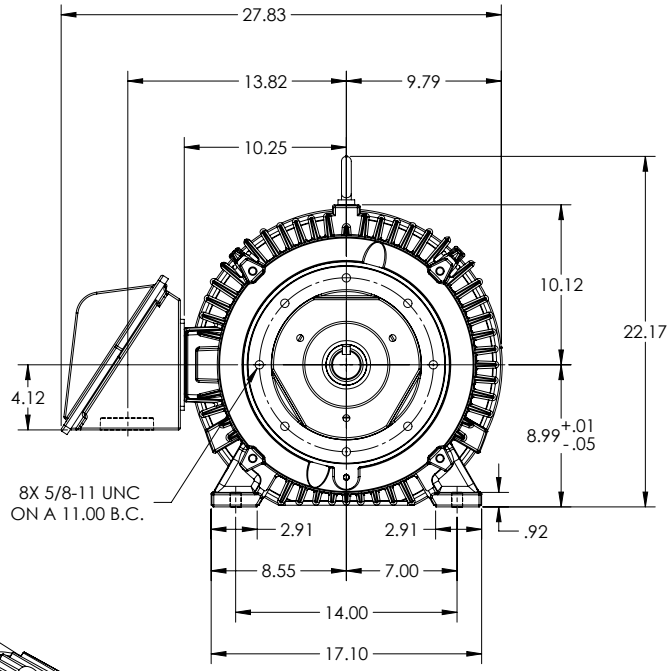

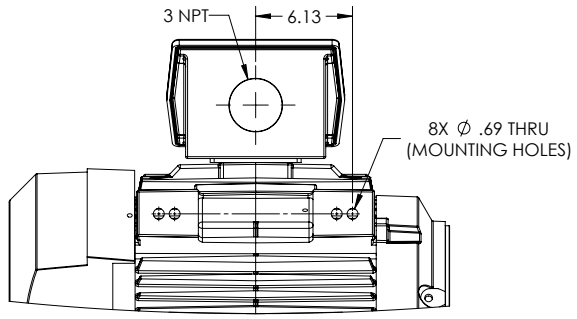

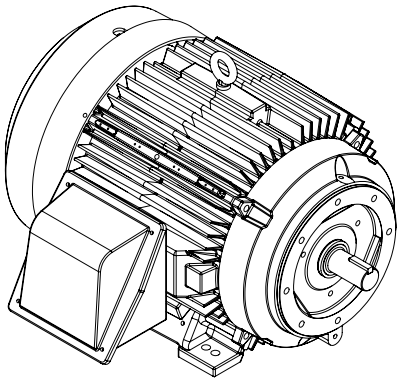

DIMENSIONS ARE IN INCHES.
WEIGHT =900 LBS +/- 15% DEPENDING ON RATING.
CUSTOMER IS RESPONSIBLE FOR DETERMINING THAT MOTOR PERFORMANCE IS SUITABLE IN THE APPLICATION.

FACE & ECCENTRICITY RUNOUT = .007 T.I.R.
IF MOUNTING CLEARANCE DETAILS ARE REQUIRED, CONSULT FACTORY.
MAX PERMISSIBLE SHAFT RUNOUT WHEN MEASURED AT END OF STANDARD SHAFT EXTENSION IS .003" T.I.R.

SHEET NUMBER 1 OF 2

617428-135

REV. DESC: UPDATE DS QUALITY			
REV: A	VERSION: 01	REVISED: 11:26:22 07/25/2023	TDR: 000001213202
MODEL NO. 617428-135			
BY: USJEDIL			C

BALDOR

E365/364TSC TEFC FOOT F1/CAST IRON CONDUIT BOX

617428-135

DUTY MASTER ALTERNATING CURRENT MOTORS

617428-135

ENCLOSURE: TOTALLY ENCLOSED

SQUIRREL-CAGE INDUCTION

MOUNTING: FOOT, F-1 SIDE

E365TSC/E364TSC MOUNTING HOLES

COOLING: FAN COOLED

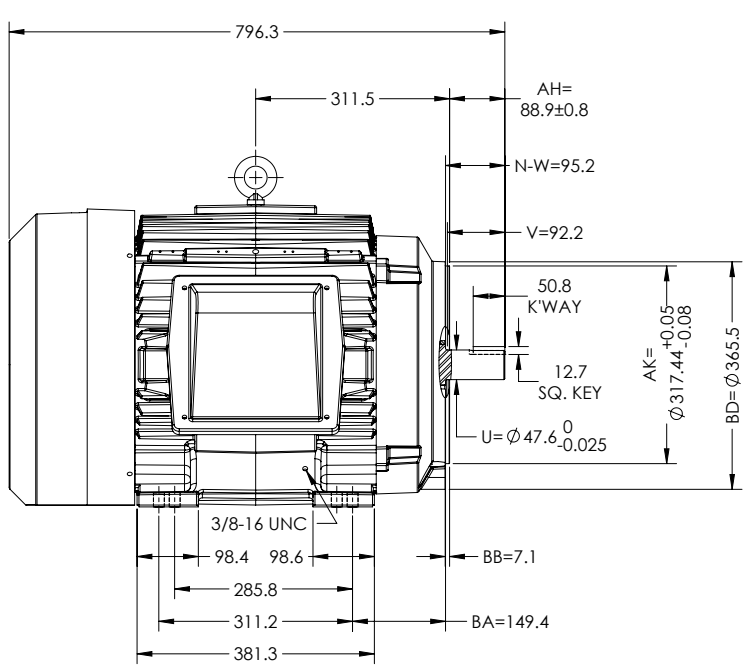

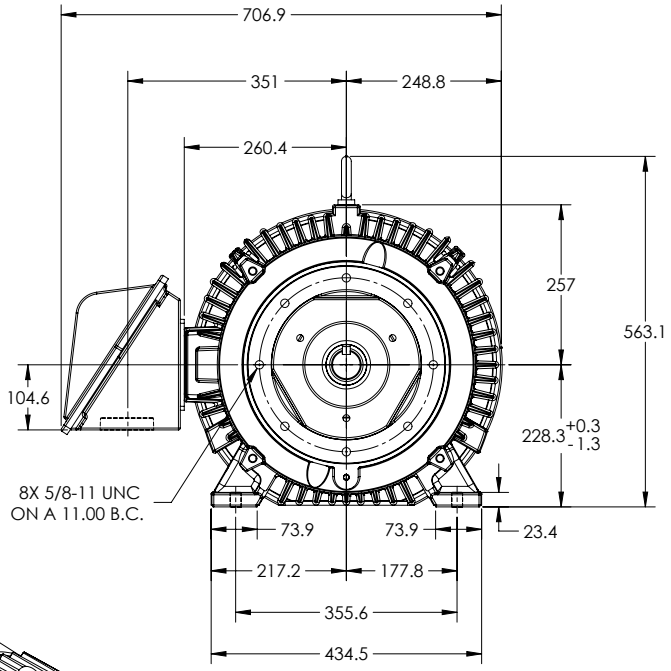

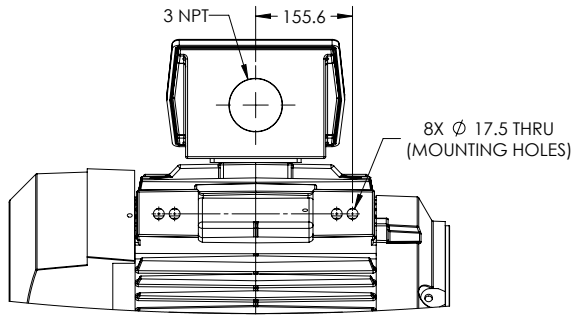

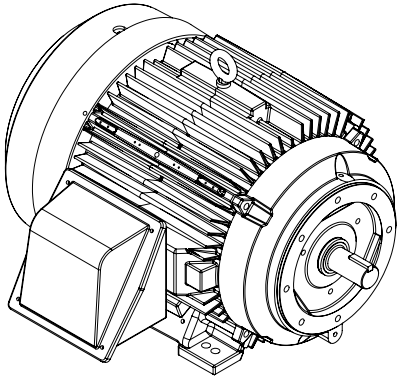

DIMENSIONS ARE IN MILLIMETERS.
WEIGHT = 408 KG +/- 15% DEPENDING ON RATING.
CUSTOMER IS RESPONSIBLE FOR DETERMINING THAT MOTOR PERFORMANCE IS SUITABLE IN THE APPLICATION.

SHEET NUMBER 2 OF 2

617428-135

FACE & ECCENTRICITY RUNOUT = .18 T.I.R.
IF MOUNTING CLEARANCE DETAILS ARE REQUIRED, CONSULT FACTORY.
MAX PERMISSIBLE SHAFT RUNOUT WHEN MEASURED AT END OF STANDARD SHAFT EXTENSION IS .08 T.I.R.

REV. DESC: UPDATE DS QUALITY			
REV: A	VERSION: 01	REVISED: 11:26:22 07/25/2023	TDR: 000001213202
MODEL NO. 617428-135			
BY: USJEDIL		C	

BALDOR

E365/364TSC TEFC FOOT F1/CAST IRON CONDUIT BOX

617428-135

416820-002

A-C MOTOR
CONNECTION DIAGRAM
STANDARD 9 LEAD DELTA-CONNECTED

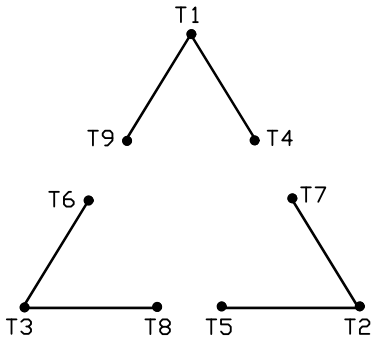

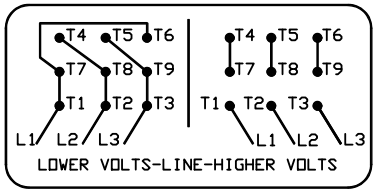

(N. P. 1575-B)

REV. DESC: ADJUST TEXT DARKNESS		
REV. LTR: B	VERSION: 02	TDR: 000001285318
FILE: \RAG\00022\453	REVISED: 09:36:26 09/24/2026	BY: USJOSUL
MTL: –		

ABB

CONN DIAG – STANDARD 9 LEAD, DELTA-CONNECTED

SH1 of 1

416820-002