35LYTT936

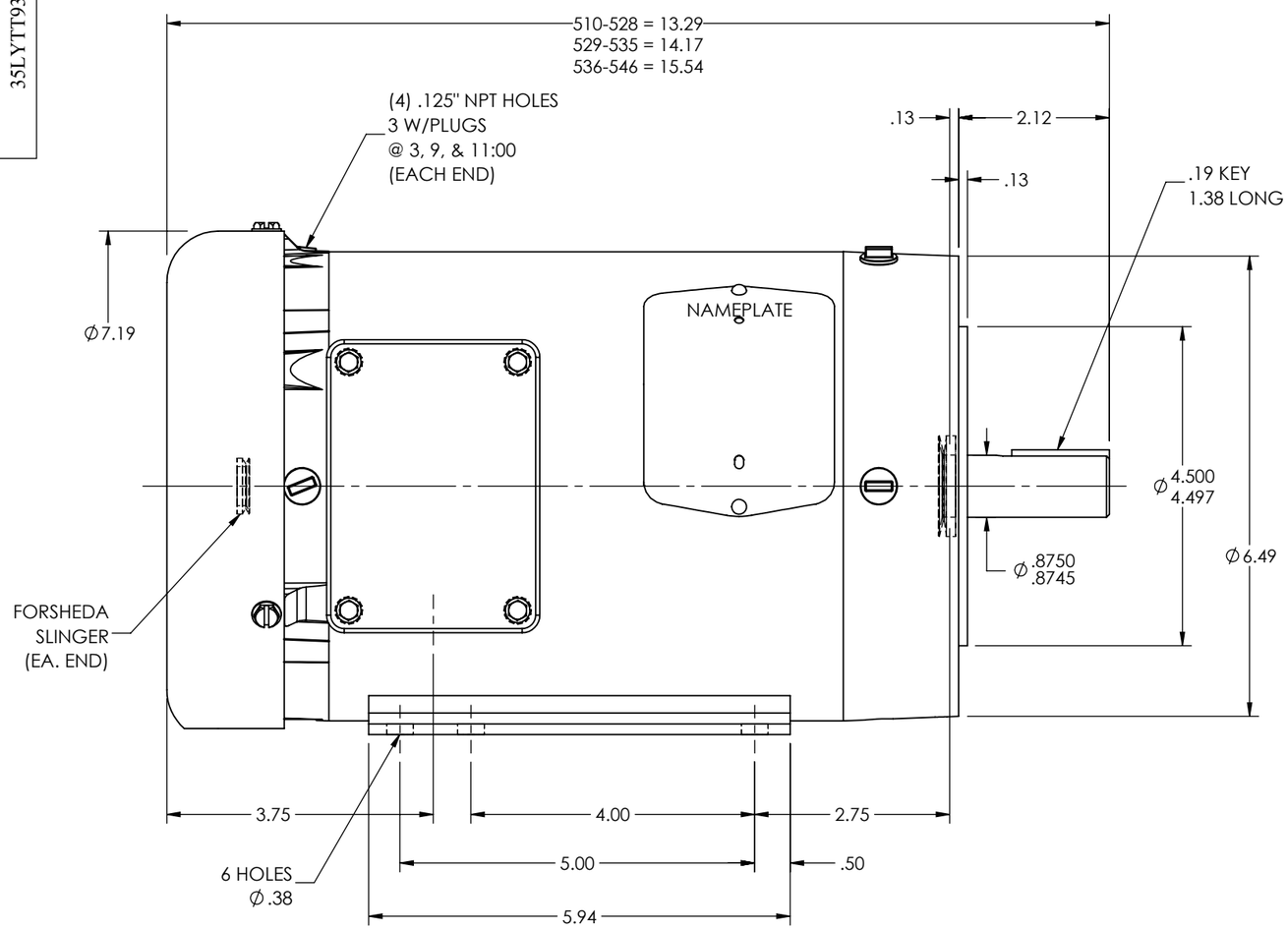

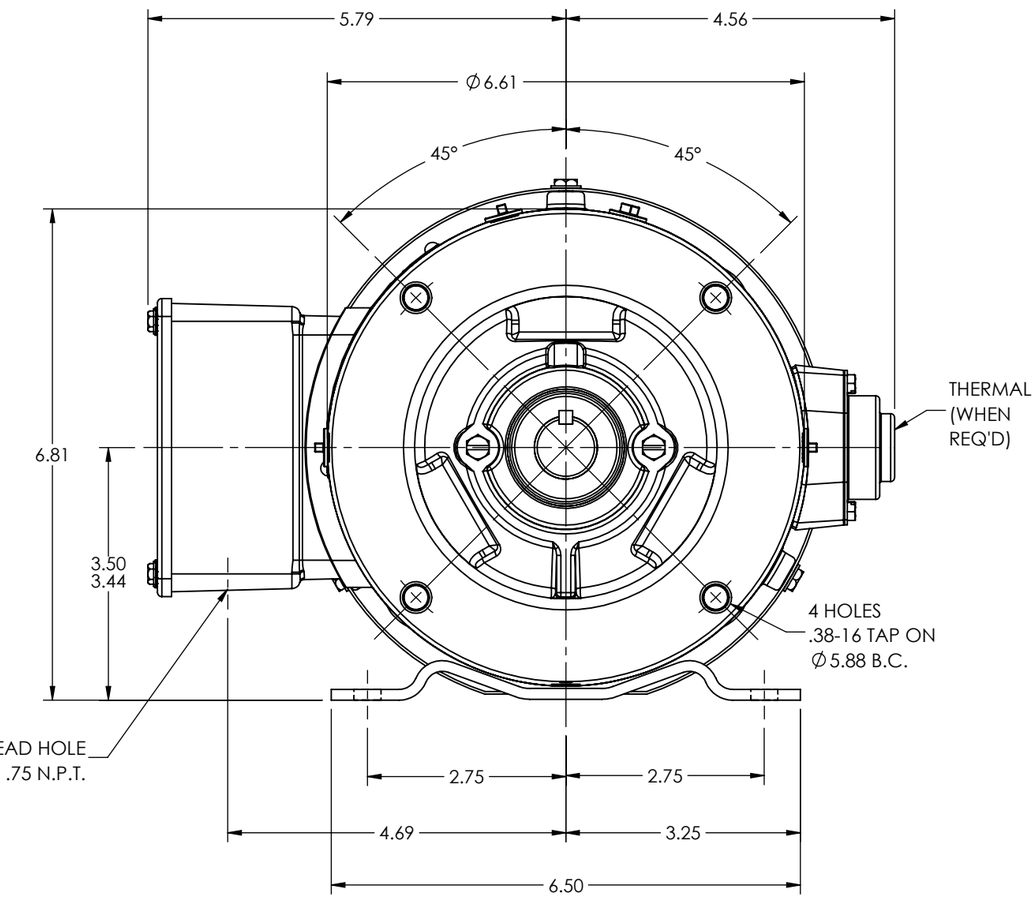

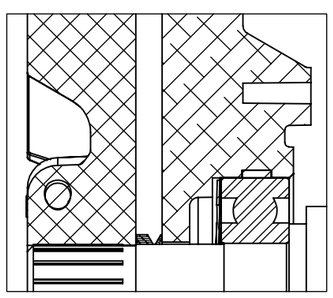

FRONT END DETAIL

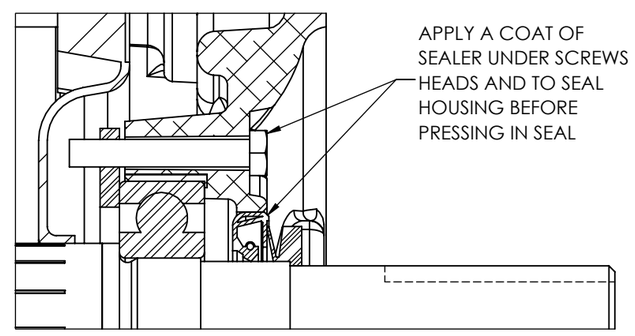

PULLEY END DETAIL

CUSTOMER IS RESPONSIBLE FOR DETERMINING THAT THE PRODUCT WILL PERFORM SUITABLY IN THE INTENDED APPLICATION

REV. DESC: UPDATE 3D MODEL BOM PER REV L, NO CHG TO 2D PRINT			
REV: G	VERSION: 07	REVISED: 08:38:25 03/31/2022	TDR: 000001188385
MODEL NO. 35LYTT936			REF: -
BY: USBUFRA			B

BALDOR - RELIANCE®

HOR 143-5TC TEFC M WASHDOWN (S/P9),2 POLE "W" BASE(35BA4009)
SH 1 of 1

35LYTT936