35LYS587

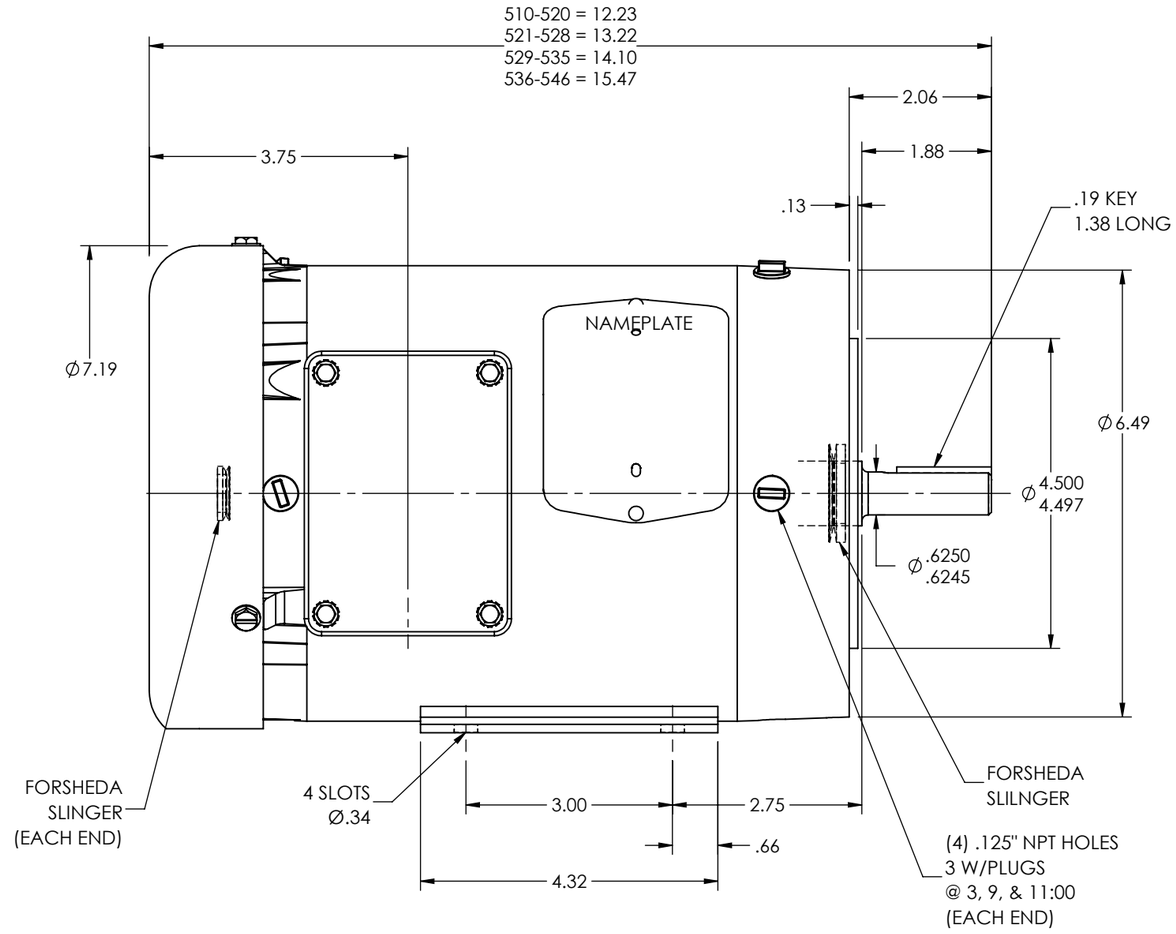

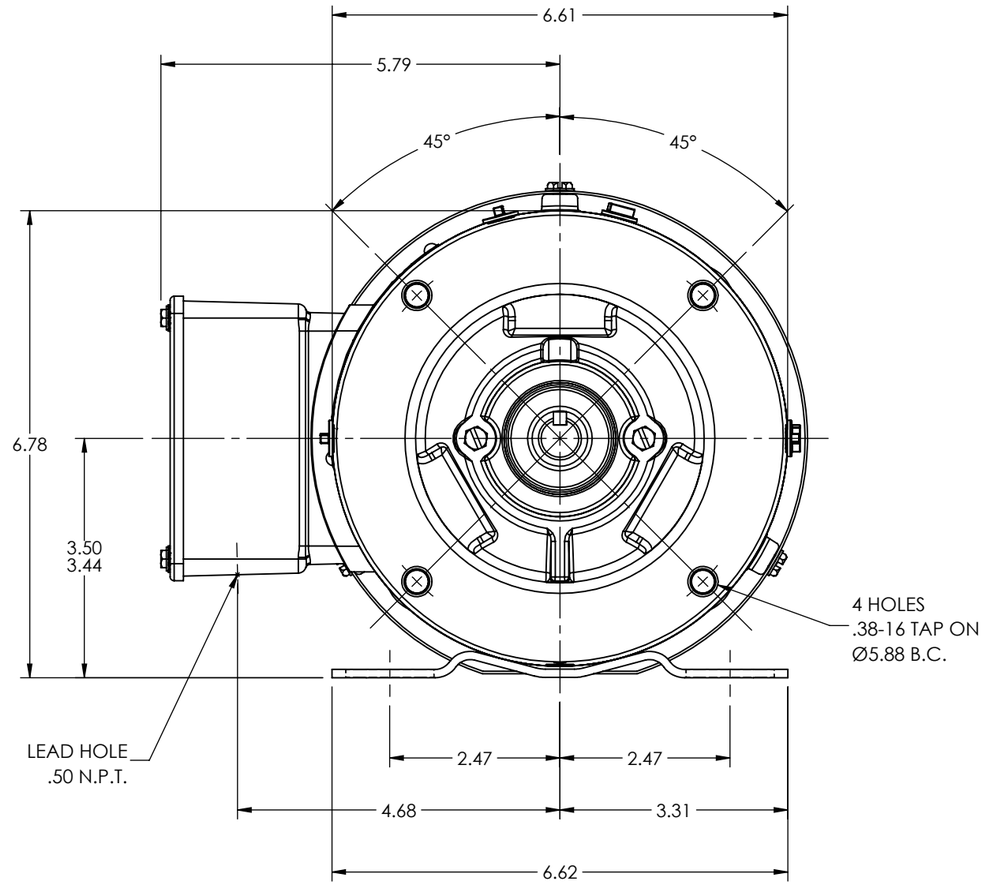

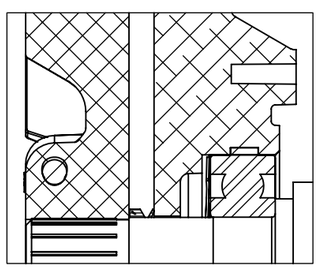

FRONT END DETAIL

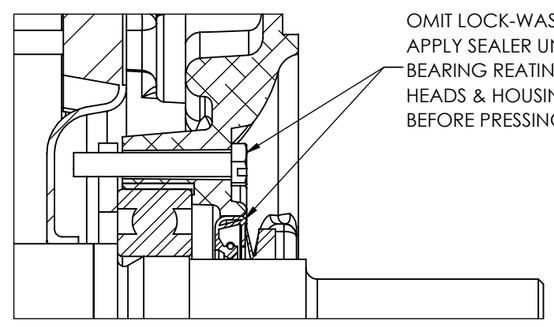

PULLEY END DETAIL

CUSTOMER IS RESPONSIBLE FOR DETERMINING THAT THE PRODUCT WILL PERFORM SUITABLY IN THE INTENDED APPLICATION

REV. DESC: UPDATE 3D MODEL BOM PER REV R, NO CHG TO 2D PRINT			
REV: H	VERSION: 08	REVISED: 10:57:08 03/14/2022	TDR: 000001187335
MODEL NO. 35LYS587			REF: -
BY: USBUFRA			B

BALDOR - RELIANCE®

STD HORZ 56C TEFC 35M WD (S/P #9)
SH 1 of 1

35LYS587