ABB BALDOR RELIANCE

Customer information packet

CEWDM3556-H

1//.75HP, 1155//970RPM, 3PH, 60//50HZ, 56HC
Class - None
Division - Not Applicable

Copyright © All product information within this document is subject to ABB Motors and Mechanical Inc. copyright © protection, unless otherwise noted.
11/27/2026 12:48:21 PM

Specifications

Enclosure	TEFC
Frame	56HC
Frame Material	Steel
Frequency	50.00 Hz
	60.00 Hz
Haz Area Class and Group	None
Haz Area Division	Not Applicable
Motor Letter Type	Three Phase
Output @ Frequency	.750 HP @ 50 HZ
	1.000 HP @ 60 HZ
Phase	3
Synchronous Speed @ Frequency	1200 RPM @ 60 HZ
Voltage @ Frequency	380.0 V @ 50 HZ
	230.0 V @ 60 HZ
	190.0 V @ 50 HZ
	460.0 V @ 60 HZ
Agency Approvals	CSA EEV
	NEMA PREMIUM
	UR
Ambient Temperature	40 °C
Auxiliary Box	NO AUXILLARY BOX
Auxiliary Box Lead Termination	None
Base Indicator	Rigid
Bearing Grease Type	Polyrex EM (-20F +300F)
Blower	None
Current @ Voltage	3.500 A @ 208.0 V
	3.200 A @ 190.0 V
	3.000 A @ 230.0 V
	1.600 A @ 380.0 V
	1.500 A @ 460.0 V
Design Code	B
Drip Cover	No Drip Cover

Part Detail

Revision	-
Type	AC
Mech. spec.	35E6082
Base	
Status	PRD/A
Elec. spec.	35WGG019
Layout	35LYE6082
Eff. date	06-22-2023
CD Diagram	CD0005
Poles	06
Leads	9#18
Proprietary	False
Created date	02-20-2023

Duty Rating	CONT
Efficiency @ 100% Load	82.5 %
Electrically Isolated Bearing	Not Electrically Isolated
Feedback Device	NO FEEDBACK
Front Shaft Indicator	None
Heater Indicator	No Heater
High Voltage Full Load Amps	1.5 a
Insulation Class	F
Inverter Code	Inverter Ready
KVA Code	J
Lifting Lugs	No Lifting Lugs
Locked Bearing Indicator	Locked Bearing
Motor Lead Quantity/Wire Size	9 @ 18 AWG
Motor Lead Termination	Flying Leads
Motor Standards	NEMA
Motor Type	3526M
Mounting Arrangement	F1
Number of Poles	6
Overall Length	13.08 IN
Power Factor	67
Product Family	Wash Down
Pulley End Bearing Type	Sealed Bearing
Pulley Face Code	C-Face
Pulley Shaft Indicator	Standard
Rodent Screen	None
RoHS Status	ROHS COMPLIANT
Service Factor	1.15
Shaft Diameter	0.625 IN
Shaft Ground Indicator	No Shaft Grounding
Shaft Rotation	Reversible
Shaft Slinger Indicator	Shaft Slinger
Speed	1155 rpm
	970 rpm
Speed Code	Single Speed

Starting Method	Direct on line
Thermal Device - Bearing	None
Thermal Device - Winding	None
Vibration Sensor Indicator	No Vibration Sensor
Winding Thermal 1	None
Winding Thermal 2	None

Nameplate

NP3956L							
CAT.NO.	CEWDM3556-H						
SPEC.	35E6082G019G1						
FRAME	56HC	**H.P.**	1//.75 TE				
VOLTS	230/460//190/380						
MAG. CUR.	2/1			**F.L. AMPS**	3/1.5//3.2/1.6		
R.P.M.	1155//970	**R.P.M. MAX**					
HZ.	60//50	**PH.**	3	**CLASS**	F		
SER.F.	1.15	**DES.**	B	**SL HZ**	1.57		
NEMA NOM. EFF.	82.5	**WK2**	0.189				
BLWR V		**PH**		**HZ**		**AMPS**	
RATING	40C AMB-CONT						
DE BRG	6205	**ODE BRG**	6203				
CC	010A	**SN**					
	SFA 3.7/1.85//3.5/1.75						

AC Induction Motor Performance Data
Record # 87695
Typical performance - not guaranteed values

Winding: 35WGG019-R006	**Type:** 3526M	**Enclosure:** TEFC

Nameplate Data				**460 V, 60 Hz: High Voltage Connection**	
Rated Output (HP)			1//0.75	**Full Load Torque**	4.479 LB-FT
Volts			230/460//190/380	**Start Configuration**	direct on line
Full Load Amps			3/1.5//3.2/1.6	**Breakdown Torque**	11.9 LB-FT
R.P.M.			1155//970	**Pull-up Torque**	7.06 LB-FT
Hz	60	**Phase**	3	**Locked-rotor Torque**	8.62 LB-FT
NEMA Design Code	B	**KVA Code**	J	**Starting Current**	9.06 A
Service Factor (S.F.)			1.15	**No-load Current**	1.02 A
NEMA Nom. Eff.	0	**Power Factor**	0	**Line-line Res. @ 25ºC**	20.372 Ω
Rating - Duty			40C AMB-CONT	**Temp. Rise @ Rated Load**	46°C
S.F. Amps			3.7/1.85	**Temp. Rise @ S.F. Load**	56°C
				Locked-rotor Power Factor	48.3
				Rotor inertia	0.189 lb-ft²

Load Characteristics 460 V, 60 Hz, 1 HP

% of Rated Load	**25**	**50**	**75**	**100**	**125**	**150**	**S.F.**
Power Factor	29	47	1	1	1	1	1
Efficiency	73.5	81.9	83.5	83.1	81.6	79.1	82.2
Speed	1192.5	1185.4	1177.6	1168.7	1159	1147	1163
Line amperes	1.07	1.21	1.41	1.67	1.98	2.35	1.86

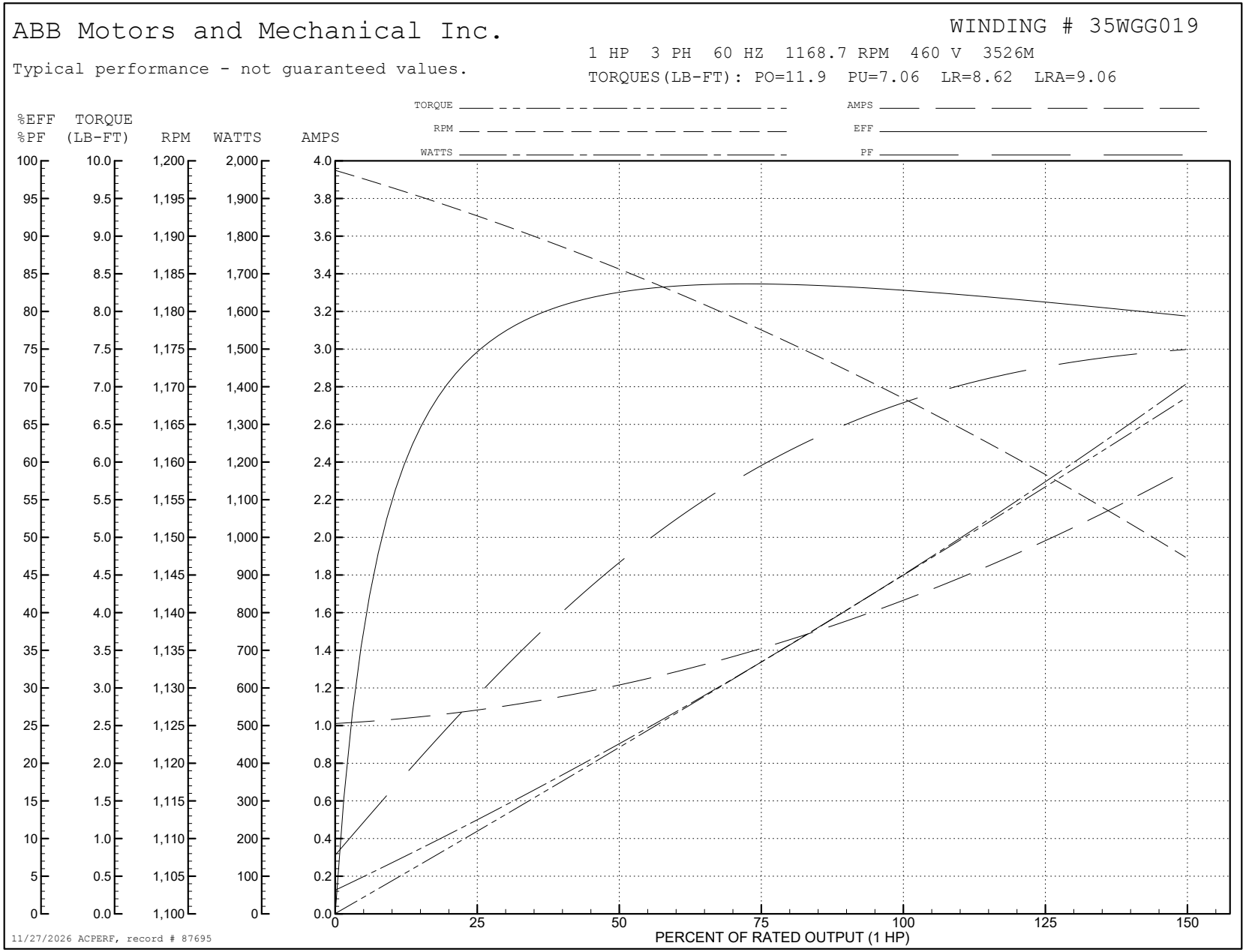
ABB Motors and Mechanical Inc.
WINDING # 35WGG019
Typical performance - not guaranteed values.
1 HP 3 PH 60 HZ 1168.7 RPM 460 V 3526M
TORQUES(LB-FT): PO=11.9 PU=7.06 LR=8.62 LRA=9.06
TORQUE
RPM
WATTS
AMPS
EFF
PF
%EFF %PF
TORQUE (LB-FT)
RPM
WATTS
AMPS
PERCENT OF RATED OUTPUT (1 HP)
11/27/2026 ACPERF, record # 87695

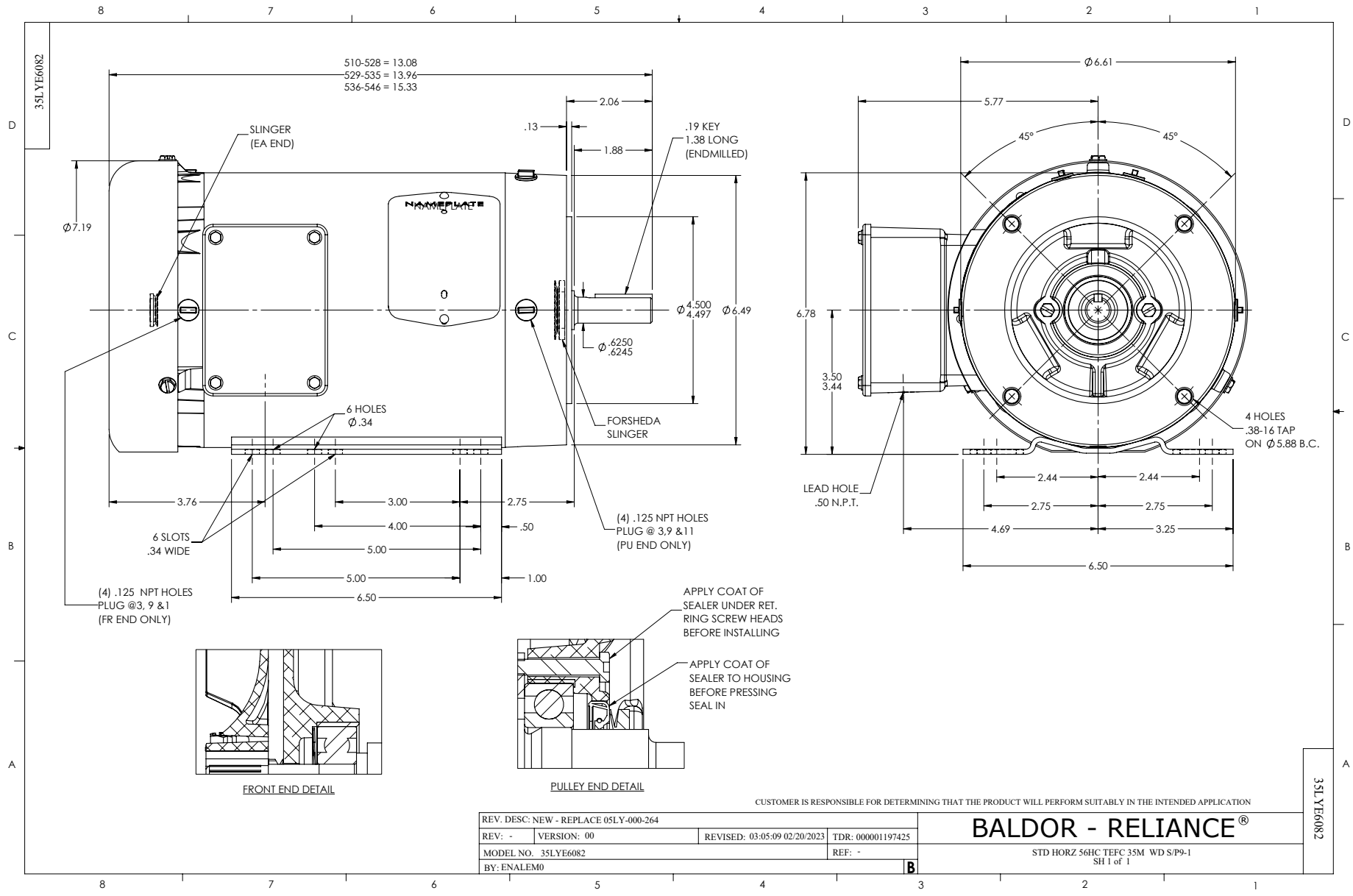
35LYE6082
510-528 = 13.08
529-535 = 13.96
536-546 = 15.33
2.06
.13
1.88
.19 KEY
1.38 LONG
(ENDMILLED)
SLINGER
(EA END)
NAMEPLATE
Ø7.19
Ø4.500
4.497
Ø6.49
Ø .6250
.6245
6 HOLES
Ø .34
FORSHEDA
SLINGER
3.76
3.00
2.75
4.00
.50
5.00
5.00
1.00
6.50
6 SLOTS
.34 WIDE
(4) .125 NPT HOLES
PLUG @ 3,9 &11
(PU END ONLY)
(4) .125 NPT HOLES
PLUG @3, 9 &1
(FR END ONLY)
Ø6.61
5.77
45°
45°
6.78
3.50
3.44
4 HOLES
.38-16 TAP
ON Ø5.88 B.C.
LEAD HOLE
.50 N.P.T.
2.44
2.44
2.75
2.75
4.69
3.25
6.50
APPLY COAT OF
SEALER UNDER RET.
RING SCREW HEADS
BEFORE INSTALLING
APPLY COAT OF
SEALER TO HOUSING
BEFORE PRESSING
SEAL IN
FRONT END DETAIL
PULLEY END DETAIL
CUSTOMER IS RESPONSIBLE FOR DETERMINING THAT THE PRODUCT WILL PERFORM SUITABLY IN THE INTENDED APPLICATION
REV. DESC: NEW - REPLACE 05LY-000-264
REV: - VERSION: 00 REVISED: 03:05:09 02/20/2023 TDR: 000001197425
MODEL NO. 35LYE6082 REF: -
BY: ENALEM0 B
BALDOR - RELIANCE®
STD HORZ 56HC TEFC 35M WD S/P9-1
SH 1 of 1
35LYE6082

CD0005

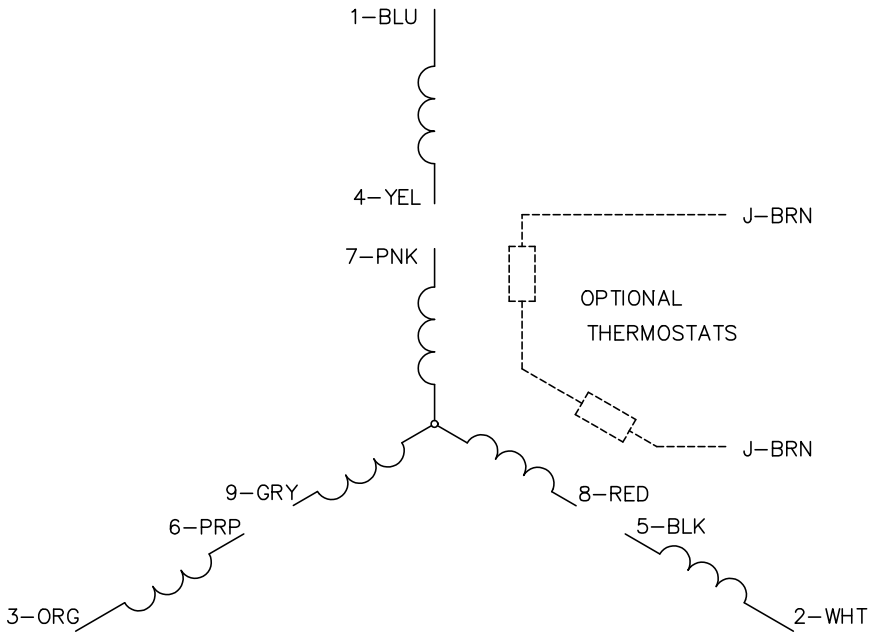

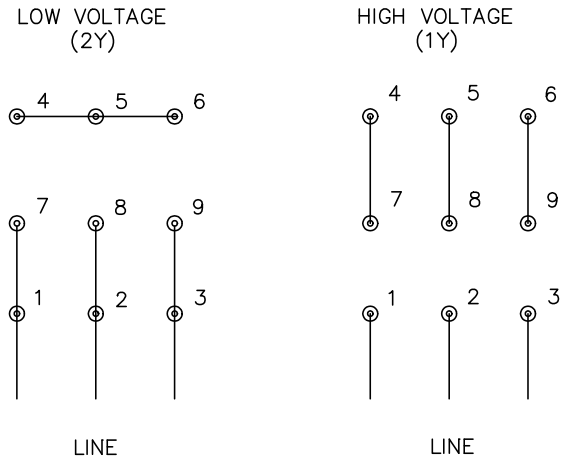

NOTES:

1. INTERCHANGE ANY TWO LINE LEADS TO REVERSE ROTATION.
2. OPTIONAL THERMOSTATS ARE PROVIDED WHEN SPECIFIED.
3. ACTUAL NUMBER OF INTERNAL PARALLEL CIRCUITS MAY BE A MULTIPLE OF THOSE SHOWN ABOVE.
4. LEAD COLORS ARE OPTIONAL. LEADS MUST ALWAYS BE NUMBERED AS SHOWN.

CD0005

REV. DESC: REVISE TO SHOW OPTIONAL COLORS			BALDOR ELECTRIC Co.
REV. LTR: E	BY: JLP	REVISED: 01/19/99 10:15	TDR: 0171435
CD0005		FILE: AAA00005140	MDL: –
		MTL: –	3PH, DV, 9 LEADS