ABB BALDOR RELIANCE

Customer information packet

CEWDM3555T

2HP, 3490RPM, 3PH, 60HZ, 143TC, 3526M, TEFC, F1
Class - None
Division - Not Applicable

Copyright © All product information within this document is subject to ABB Motors and Mechanical Inc. copyright © protection, unless otherwise noted.
11/28/2026 10:27:54 PM

Specifications

Enclosure	TEFC
Frame	145TC
Frame Material	Steel
Frequency	60.00 Hz
Haz Area Class and Group	None
Haz Area Division	Not Applicable
Motor Letter Type	Three Phase
Output @ Frequency	2.000 HP @ 60 HZ
Phase	3
Synchronous Speed @ Frequency	3600 RPM @ 60 HZ
Voltage @ Frequency	460.0 V @ 60 HZ
	230.0 V @ 60 HZ
Agency Approvals	CSA
	CSA EEV
	UR
Ambient Temperature	40 °C
Auxiliary Box	NO AUXILLARY BOX
Auxiliary Box Lead Termination	None
Base Indicator	Rigid
Bearing Grease Type	Polyrex EM (-20F +300F)
Blower	None
Current @ Voltage	5.000 A @ 230.0 V
	5.300 A @ 208.0 V
	2.500 A @ 460.0 V
Design Code	B
Drip Cover	No Drip Cover
Duty Rating	CONT
Efficiency @ 100% Load	85.5 %
Electrically Isolated Bearing	Not Electrically Isolated
Feedback Device	NO FEEDBACK
Front Face Code	Standard
Front Shaft Indicator	None

Part Detail

Revision	AE
Type	AC
Mech. spec.	35TT936
Base	
Status	PRD/A
Elec. spec.	35WGM774
Layout	35LYTT936
Eff. date	09-10-2026
CD Diagram	CD0005
Poles	02
Leads	9#18
Proprietary	False
Created date	07-15-2010

Heater Indicator	No Heater
High Voltage Full Load Amps	2.5 a
Insulation Class	F
Inverter Code	Inverter Ready
KVA Code	M
Lifting Lugs	No Lifting Lugs
Locked Bearing Indicator	Locked Bearing
Motor Lead Exit	Ko Box
Motor Lead Quantity/Wire Size	9 @ 18 AWG
Motor Lead Termination	Flying Leads
Motor Standards	NEMA
Motor Type	3526M
Mounting Arrangement	F1
Number of Poles	2
Overall Length	13.28 IN
Power Factor	88
Product Family	Wash Down
Pulley End Bearing Type	Sealed Bearing
Pulley Face Code	C-Face
Pulley Shaft Indicator	Standard
Rodent Screen	None
RoHS Status	ROHS COMPLIANT
Service Factor	1.15
Shaft Diameter	0.875 IN
Shaft Extension Location	Pulley End
Shaft Ground Indicator	No Shaft Grounding
Shaft Rotation	Reversible
Shaft Slinger Indicator	Shaft Slinger
Speed	3490 rpm
Speed Code	Single Speed
Starting Method	Direct on line
Thermal Device - Bearing	None
Thermal Device - Winding	None
Vibration Sensor Indicator	No Vibration Sensor

Winding Thermal 1	None
Winding Thermal 2	None

Nameplate

NP1669L											
CAT.NO.	CEWDM3555T										
SPEC.	35TT936M774G1										
HP	2										
VOLTS	230/460										
AMP	5/2.5										
RPM	3490										
FRAME	145TC		**HZ**	60			**PH**	3			
SER.F.	1.15	**CODE**	M	**DES**	B	**CLASS**	F				
NEMA-NOM-EFF	85.5	**PF**	88								
RATING	40C AMB-CONT										
CC	010A										
DE	6205		**ODE**	6203							
ENCL	TEFC	**SN**									
BLANK	20:1CT, 20:1VT										

AC Induction Motor Performance Data
Record # 52479
Typical performance - not guaranteed values

Winding: 35WGM774-R004	**Type:** 3526M	**Enclosure:** TEFC

Nameplate Data				**460 V, 60 Hz: High Voltage Connection**	
Rated Output (HP)			2	**Full Load Torque**	2.98 LB-FT
Volts			230/460	**Start Configuration**	direct on line
Full Load Amps			5/2.5	**Breakdown Torque**	14.2 LB-FT
R.P.M.			3490	**Pull-up Torque**	6.33 LB-FT
Hz	60	**Phase**	3	**Locked-rotor Torque**	11.2 LB-FT
NEMA Design Code	B	**KVA Code**	M	**Starting Current**	25.9 A
Service Factor (S.F.)			1.15	**No-load Current**	0.912 A
NEMA Nom. Eff.	85.5	**Power Factor**	88	**Line-line Res. @ 25ºC**	6.88 Ω
Rating - Duty			40C AMB-CONT	**Temp. Rise @ Rated Load**	44°C
S.F. Amps				**Temp. Rise @ S.F. Load**	52°C
				Locked-rotor Power Factor	49.9
				Rotor inertia	0.0719 LB-FT2

Load Characteristics 460 V, 60 Hz, 2 HP

% of Rated Load	**25**	**50**	**75**	**100**	**125**	**150**	**S.F.**
Power Factor	55	75	84	88	90	91	89
Efficiency	73.4	83.6	85.8	86.3	85.8	84.7	86
Speed	3572	3547	3520	3492	3461	3426	3473
Line amperes	1.1	1.47	1.93	2.44	3	3.61	2.78

ABB Motors and Mechanical Inc.

WINDING # 35WGM774

2 HP 3 PH 60 HZ 3490 RPM 460 V 3526M

Typical performance - not guaranteed values.

TORQUES(LB-FT): PO=14.2 PU=6.33 LR=11.2 LRA=25.9

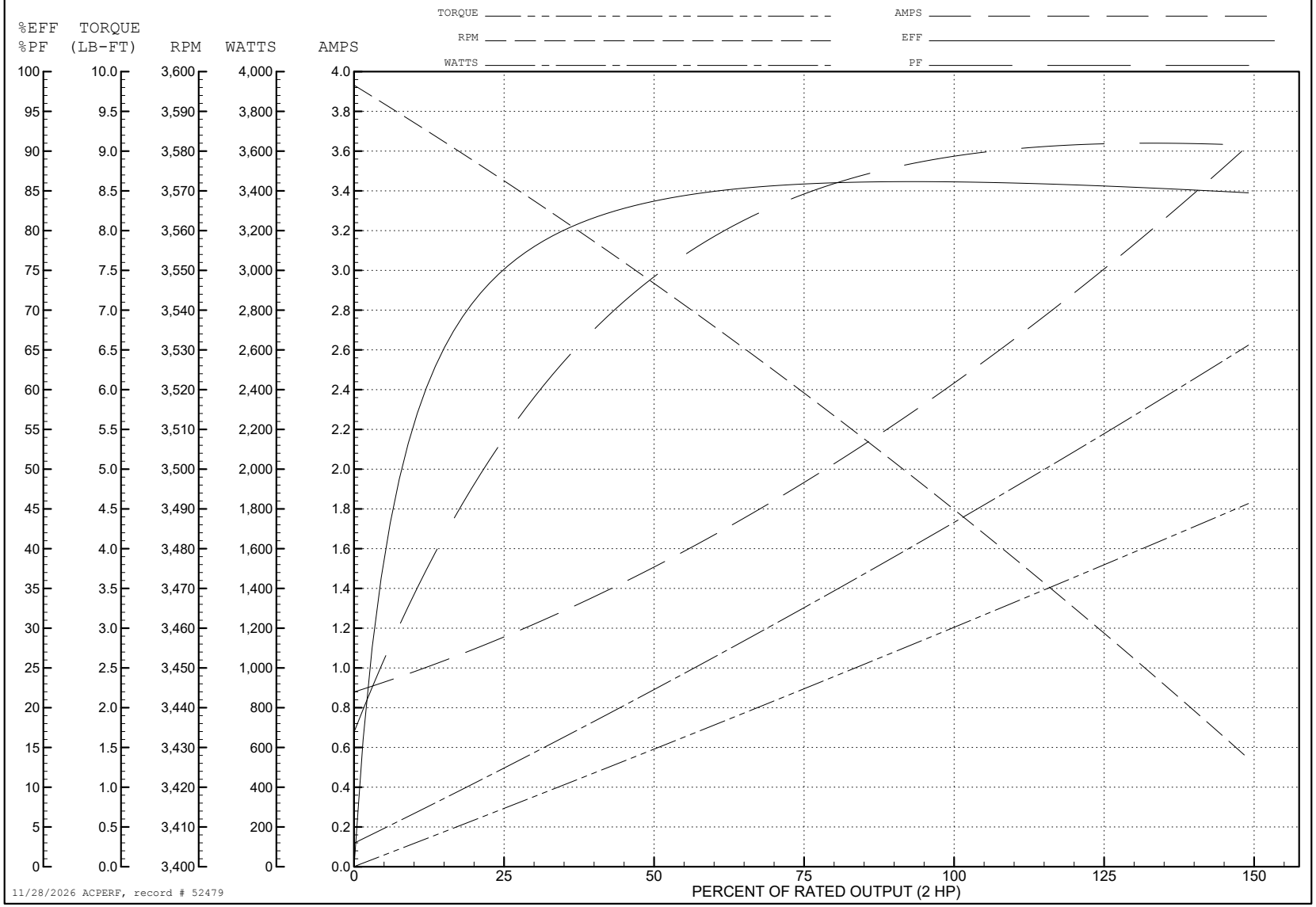

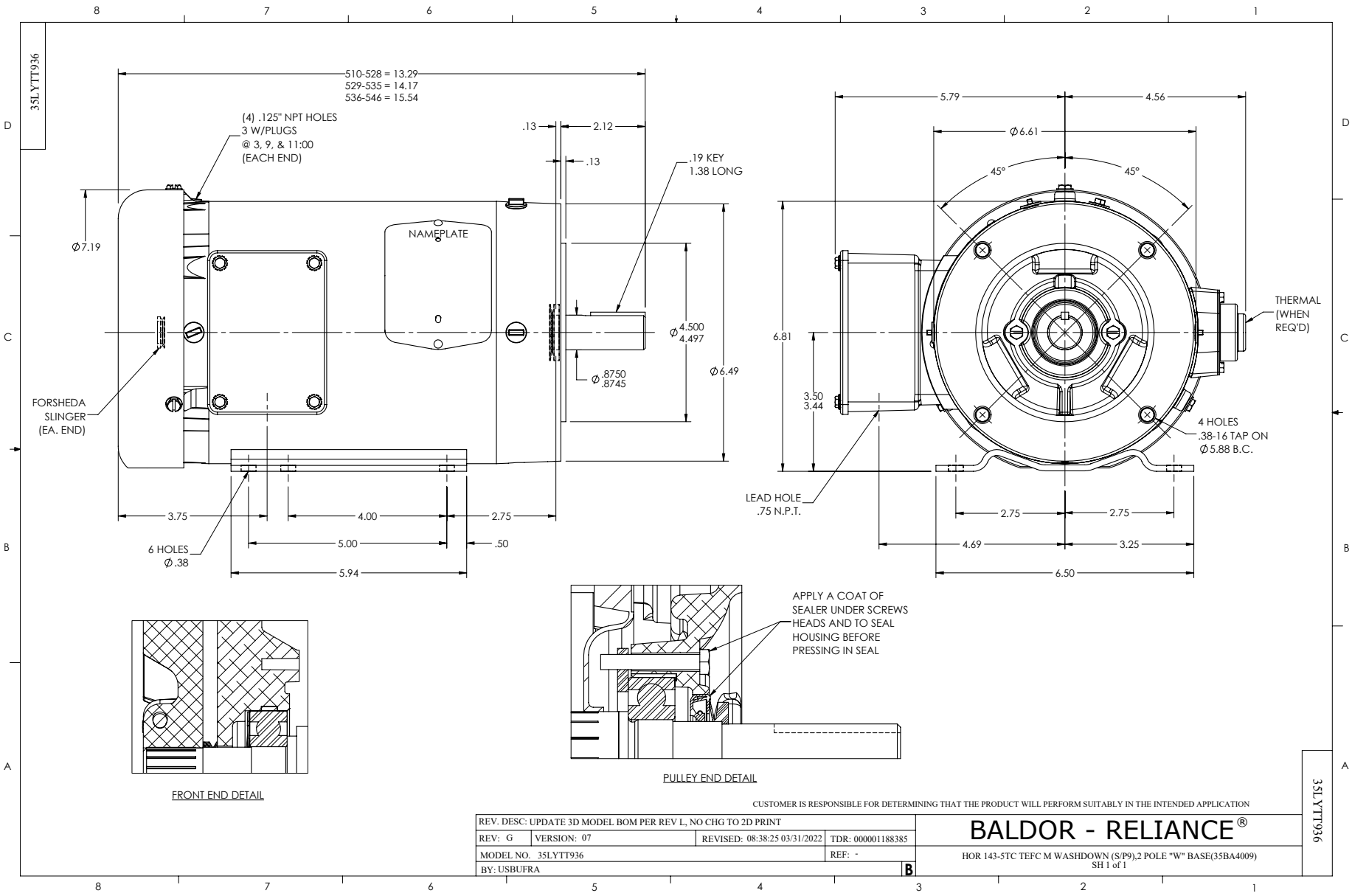
35LYTT936
510-528 = 13.29
529-535 = 14.17
536-546 = 15.54
(4) .125" NPT HOLES
3 W/PLUGS
@ 3, 9, & 11:00
(EACH END)
.13
2.12
.13
.19 KEY
1.38 LONG
NAMEPLATE
Ø7.19
Ø 4.500
4.497
Ø .8750
.8745
Ø6.49
FORSHEDA
SLINGER
(EA. END)
3.75
4.00
2.75
5.00
.50
6 HOLES
Ø .38
5.94
5.79
4.56
Ø6.61
45°
45°
6.81
3.50
3.44
THERMAL
(WHEN
REQ'D)
4 HOLES
.38-16 TAP ON
Ø5.88 B.C.
LEAD HOLE
.75 N.P.T.
2.75
2.75
4.69
3.25
6.50
APPLY A COAT OF
SEALER UNDER SCREWS
HEADS AND TO SEAL
HOUSING BEFORE
PRESSING IN SEAL
FRONT END DETAIL
PULLEY END DETAIL
CUSTOMER IS RESPONSIBLE FOR DETERMINING THAT THE PRODUCT WILL PERFORM SUITABLY IN THE INTENDED APPLICATION
REV. DESC: UPDATE 3D MODEL BOM PER REV L, NO CHG TO 2D PRINT
REV: G
VERSION: 07
REVISED: 08:38:25 03/31/2022
TDR: 000001188385
MODEL NO. 35LYTT936
REF: -
BY: USBUFRA
B
BALDOR - RELIANCE®
HOR 143-5TC TEFC M WASHDOWN (S/P9),2 POLE "W" BASE(35BA4009)
SH 1 of 1
35LYTT936

CD0005

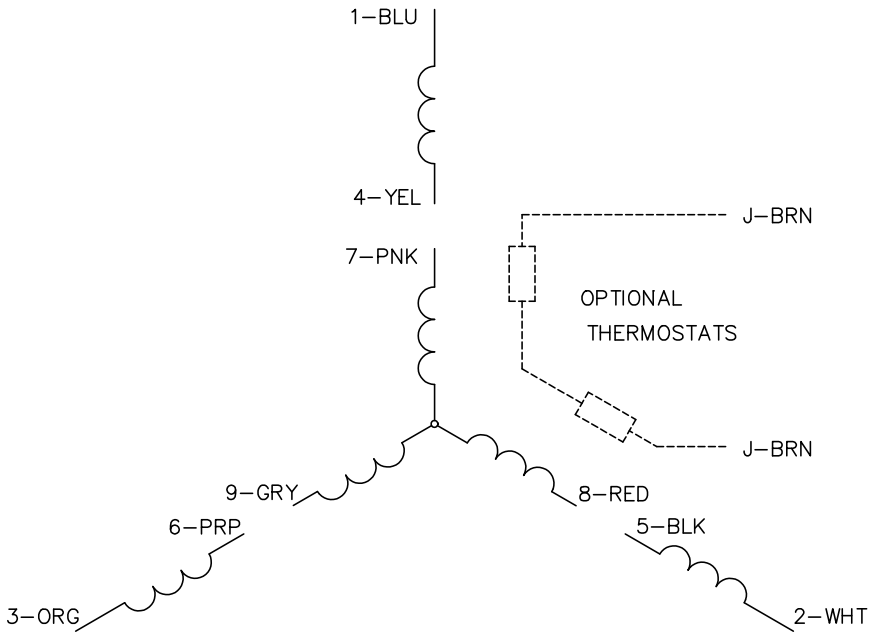

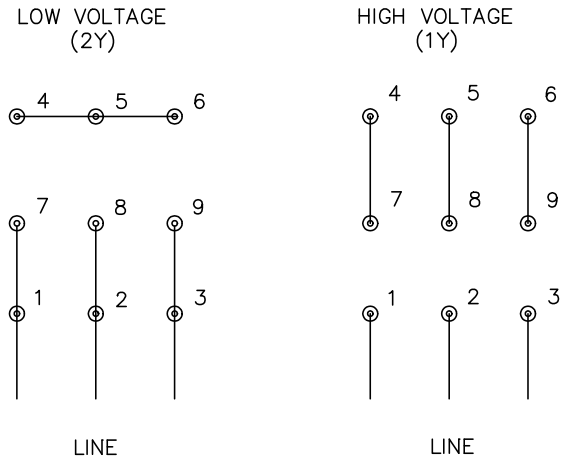

NOTES:

1. INTERCHANGE ANY TWO LINE LEADS TO REVERSE ROTATION.
2. OPTIONAL THERMOSTATS ARE PROVIDED WHEN SPECIFIED.
3. ACTUAL NUMBER OF INTERNAL PARALLEL CIRCUITS MAY BE A MULTIPLE OF THOSE SHOWN ABOVE.
4. LEAD COLORS ARE OPTIONAL. LEADS MUST ALWAYS BE NUMBERED AS SHOWN.

CD0005

REV. DESC: REVISE TO SHOW OPTIONAL COLORS			BALDOR ELECTRIC Co.
REV. LTR: E	BY: JLP	REVISED: 01/19/99 10:15	TDR: 0171435
CD0005		FILE: AAA00005140	MDL: –
		MTL: –	3PH, DV, 9 LEADS