35LYS593

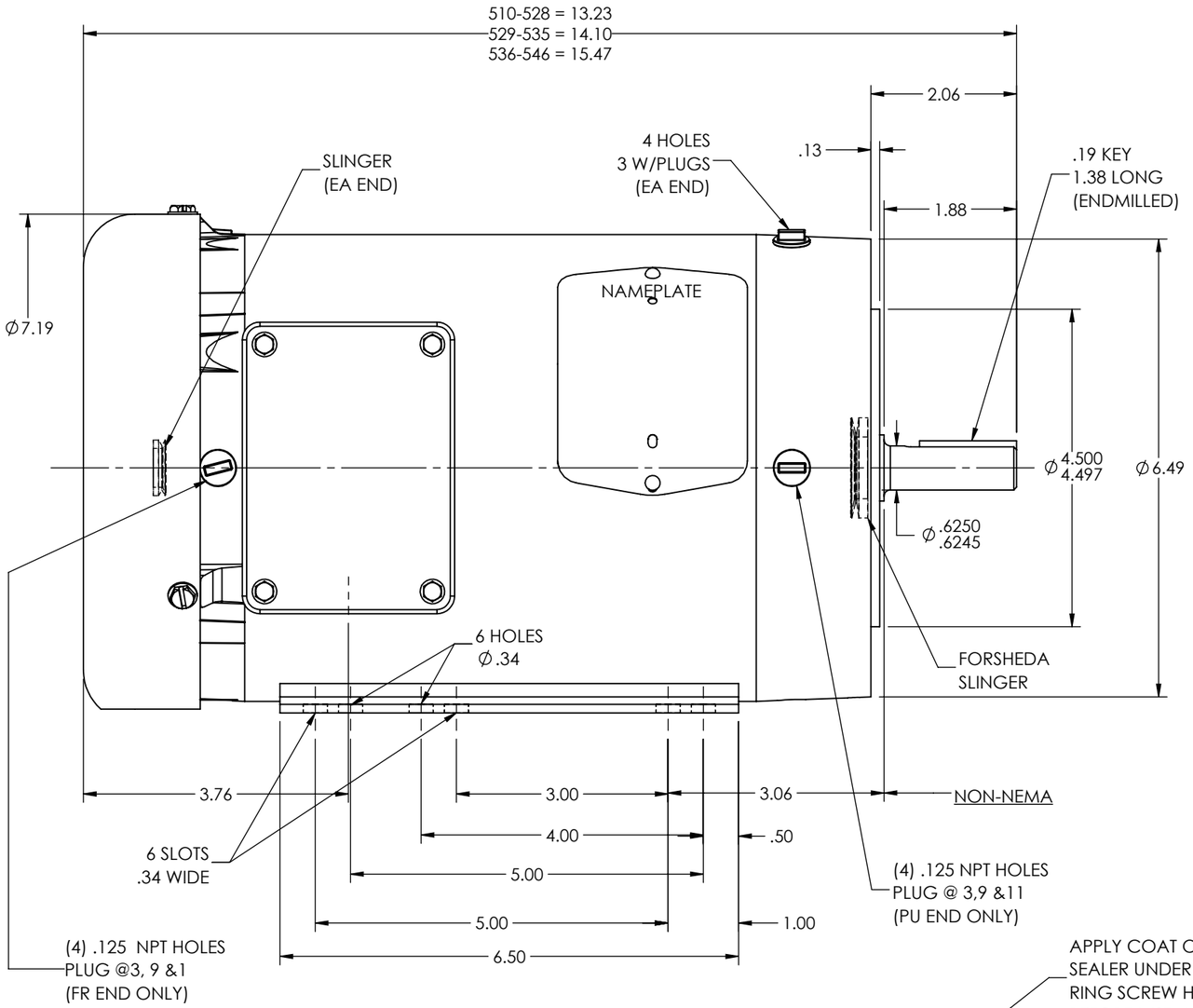

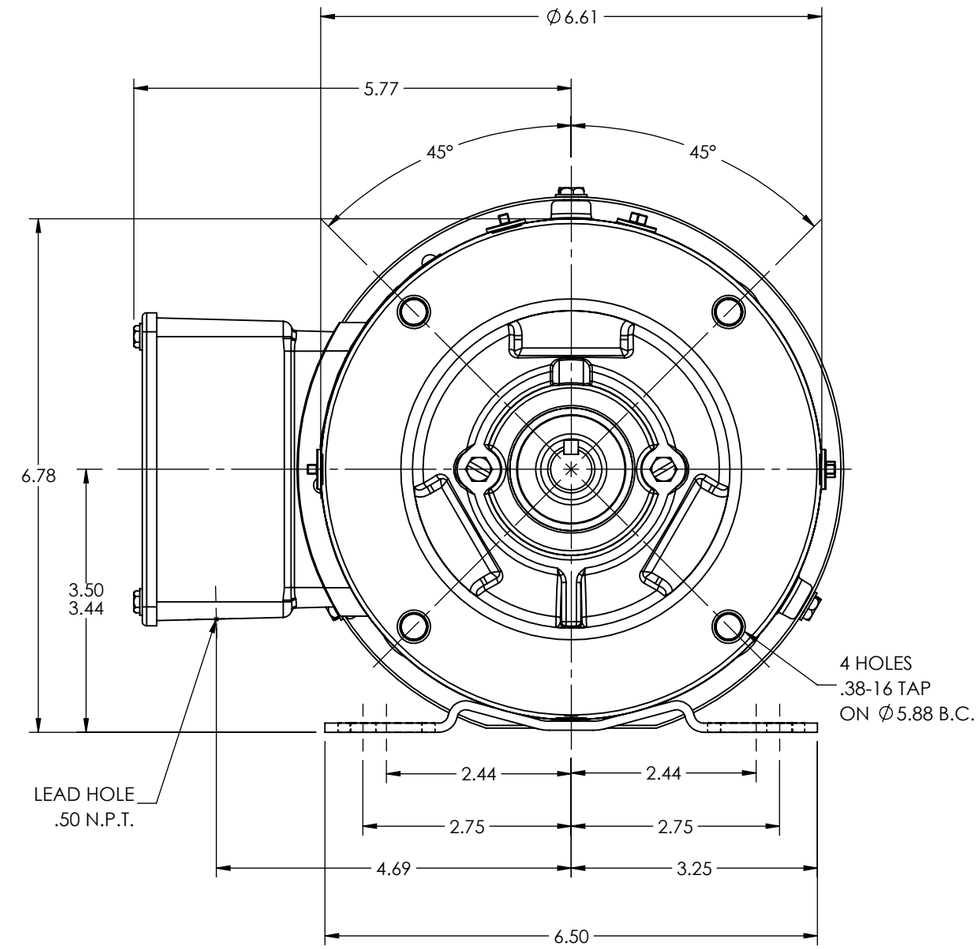

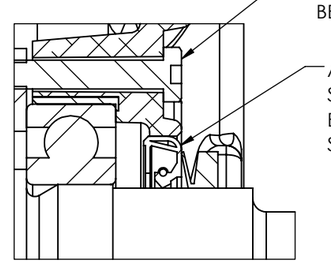

PULLEY END DETAIL

APPLY COAT OF SEALER UNDER RET. RING SCREW HEADS BEFORE INSTALLING

APPLY COAT OF SEALER TO HOUSING BEFORE PRESSING SEAL IN

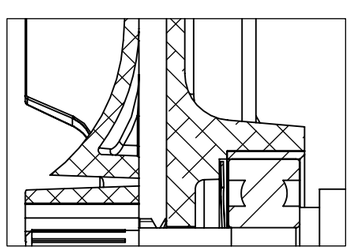

FRONT END DETAIL

CUSTOMER IS RESPONSIBLE FOR DETERMINING THAT THE PRODUCT WILL PERFORM SUITABLY IN THE INTENDED APPLICATION

REV. DESC: UPDATE 3D MODEL BOM PER REV V, NO CHG TO 2D PRINT			
REV: H	VERSION: 08	REVISED: 11:43:40 03/14/2022	TDR: 000001187335
MODEL NO. 35LYS593			REF: -
BY: USBUFRA			B

BALDOR - RELIANCE®

STD HORZ 56HCY TEFC 35M WASH DOWN (SP 9)
SH 1 of 1

35LYS593