35LYSS592

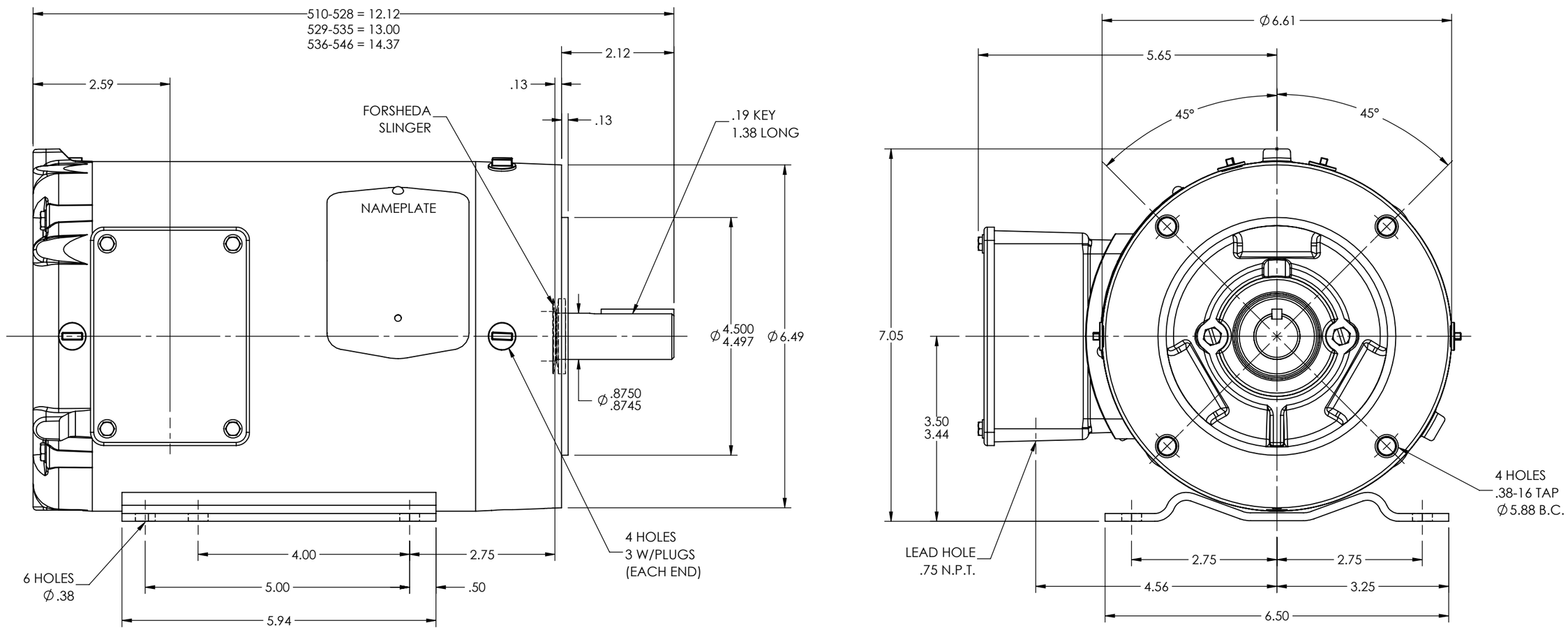

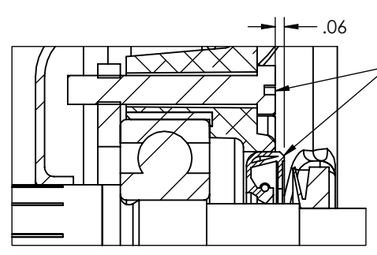

PULLEY END DETAIL

CUSTOMER IS RESPONSIBLE FOR DETERMINING THAT THE PRODUCT WILL PERFORM SUITABLY IN THE INTENDED APPLICATION

REV. DESC: UPDATE 3D MODEL BOM PER REV H, NO CHG TO 2D PRINT			
REV: C	VERSION: 03	REVISED: 03:24:26 03/30/2022	TDR: 000001188385
MODEL NO. 35LYSS592			REF: -
BY: USBUFRA			B

BALDOR - RELIANCE®

STD HORZ 143-5TC TENV 35M WD (S/P #9) W/.75 NPT LEAD HOLE
SH 1 of 1

35LYSS592