ABB BALDOR RELIANCE

Customer information packet

CEUHM3558

2 /1.5KWHP, 1750RPM, 3PH, 60HZ, 56C, 3526M, TE
Class - None
Division - Not Applicable

Copyright © All product information within this document is subject to ABB Motors and Mechanical Inc. copyright © protection, unless otherwise noted.
11/24/2026 12:13:01 AM

Specifications

Enclosure	TEFC
Frame	56C
Frame Material	Steel
Frequency	60.00 Hz
Haz Area Class and Group	None
Haz Area Division	Not Applicable
Motor Letter Type	Three Phase
Output @ Frequency	2.000 HP @ 60 HZ
Phase	3
Synchronous Speed @ Frequency	1800 RPM @ 60 HZ
Voltage @ Frequency	460.0 V @ 60 HZ
	230.0 V @ 60 HZ
Agency Approvals	CE
	CURUSEEV
	NEMA PREMIUM
	UKCA
	WEEE
Ambient Temperature	40 °C
Auxiliary Box	NO AUXILLARY BOX
Auxiliary Box Lead Termination	None
Base Indicator	Rigid
Bearing Grease Type	Polyrex EM (-20F +300F)
Blower	None
Current @ Voltage	5.800 A @ 208.0 V
	5.200 A @ 230.0 V
	2.600 A @ 460.0 V
Design Code	B
Drip Cover	No Drip Cover
Duty Rating	CONT
Efficiency @ 100% Load	86.5 %
Electrically Isolated Bearing	Not Electrically Isolated
Feedback Device	NO FEEDBACK

Part Detail

Revision	-
Type	AC
Mech. spec.	35X046
Base	
Status	PRD/A
Elec. spec.	35WGZ165
Layout	35LYX046
Eff. date	02-19-2026
CD Diagram	CD0005
Poles	04
Leads	9#18
Proprietary	False
Created date	11-04-2025

Front Shaft Indicator	None
Heater Indicator	No Heater
High Voltage Full Load Amps	2.6 a
Insulation Class	F
Inverter Code	Inverter Ready
KVA Code	K
Lifting Lugs	No Lifting Lugs
Locked Bearing Indicator	Locked Bearing
Motor Lead Quantity/Wire Size	9 @ 18 AWG
Motor Lead Termination	Flying Leads
Motor Standards	NEMA
Motor Type	3526M
Mounting Arrangement	F3
Number of Poles	4
Overall Length	13.23 IN
Power Factor	82
Product Family	General Purpose
Pulley End Bearing Type	Ball
Pulley Face Code	C-Face
Pulley Shaft Indicator	Standard
Rodent Screen	None
Service Factor	1.15
Shaft Diameter	0.625 IN
Shaft Ground Indicator	No Shaft Grounding
Shaft Rotation	Reversible
Shaft Slinger Indicator	No Slinger
Speed	1750 rpm
Speed Code	Single Speed
Starting Method	Direct on line
Thermal Device - Bearing	None
Thermal Device - Winding	None
Vibration Sensor Indicator	No Vibration Sensor
Winding Thermal 1	None
Winding Thermal 2	None

Nameplate

NP2934L								
CAT.NO.	CEUHM3558							
SPEC.	35X046Z165G1							
HP	2 /1.5KW							
VOLTS	230/460							
AMP	5.6/2.8							
R.P.M. (1/MIN)	1760							
FRAME	56C	**HZ**	60		**PH**	3		
SER.F.	1.15	**CODE**	K	**DES**	B	**CL**	F	
NEMA-NOM-EFF	86.5	**PF**	78					
RATING	40C AMB-CONT							
CC	010A							
DE	6205	**ODE**	6203					
ENCL	TEFC	**SN**						
	IE3-87.6(75%) 86.5(50%)							

AC Induction Motor Performance Data
Record # 114535
Typical performance - not guaranteed values

Winding: 35WGZ165-R001	**Type:** 3526M	**Enclosure:** TEFC

Nameplate Data				**460 V, 60 Hz: High Voltage Connection**	
Rated Output (HP)			2	**Full Load Torque**	5.979 LB-FT
Volts			230/460	**Start Configuration**	direct on line
Full Load Amps			5.2/2.6	**Breakdown Torque**	18.4 LB-FT
R.P.M.			1750	**Pull-up Torque**	13.7 LB-FT
Hz	60	**Phase**	3	**Locked-rotor Torque**	14.5 LB-FT
NEMA Design Code	B	**KVA Code**	K	**Starting Current**	17.9 A
Service Factor (S.F.)			1.15	**No-load Current**	1.24 A
NEMA Nom. Eff.	86.5	**Power Factor**	82	**Line-line Res. @ 25ºC**	10.857 Ω
Rating - Duty			40C AMB-CONT	**Temp. Rise @ Rated Load**	59°C
S.F. Amps			6/3	**Temp. Rise @ S.F. Load**	75°C
				Locked-rotor Power Factor	59.3

Load Characteristics 460 V, 60 Hz, 2 HP

% of Rated Load	**25**	**50**	**75**	**100**	**125**	**150**	**S.F.**
Power Factor	42	64	76	82	86	87	84
Efficiency	82.7	87.6	87.8	86.6	84.6	82	85.4
Speed	1788.4	1776.9	1763.5	1748.9	1731.7	1711.8	1739
Line amperes	1.35	1.65	2.09	2.61	3.21	3.91	2.97

ABB Motors and Mechanical Inc.

WINDING # 35WGZ165

2 HP 3 PH 60 HZ 1750 RPM 460 V 3526M

Typical performance - not guaranteed values.

TORQUES(LB-FT): PO=18.4 PU=13.7 LR=14.5 LRA=17.9

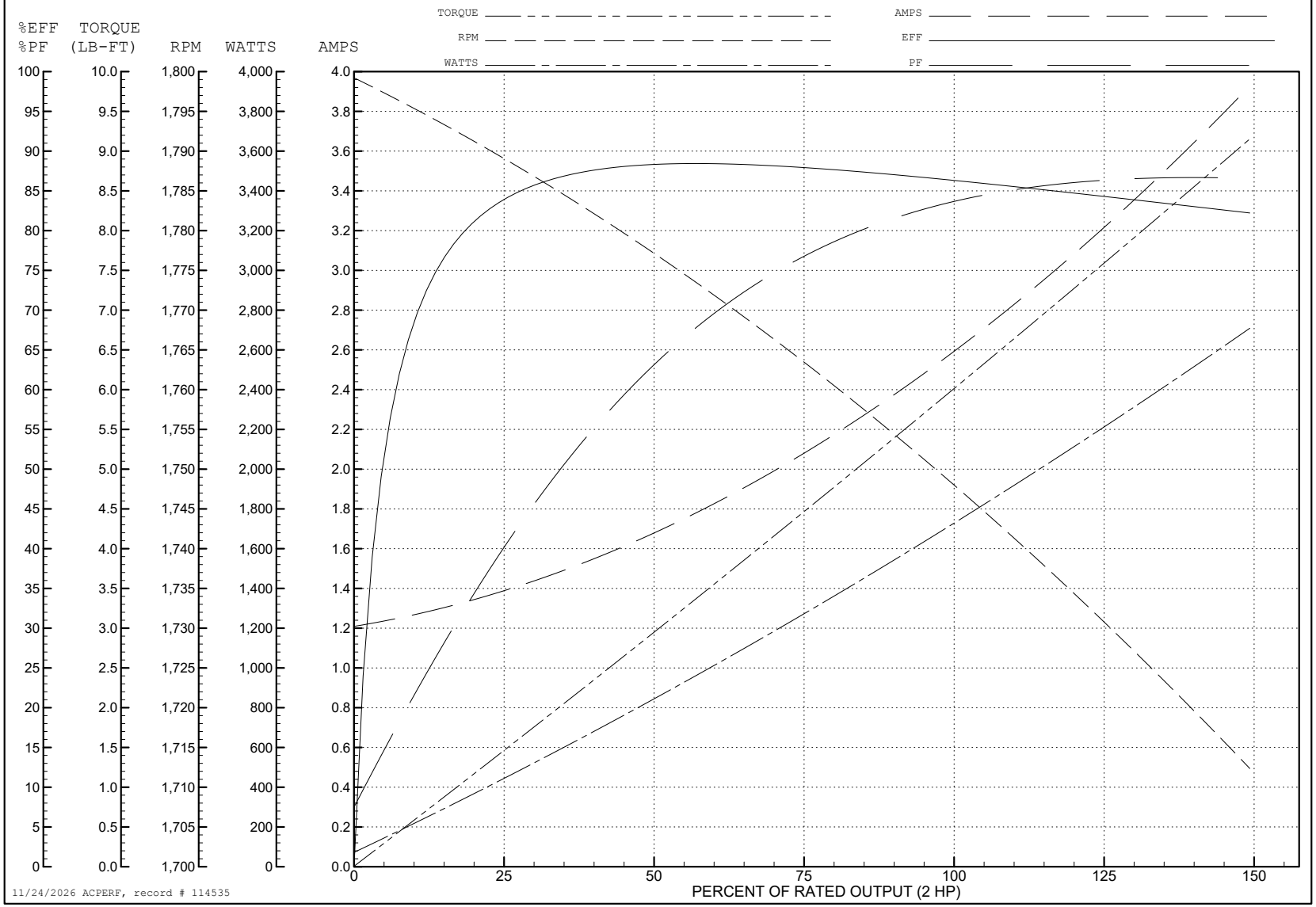

11/24/2026 ACPERF, record # 114535

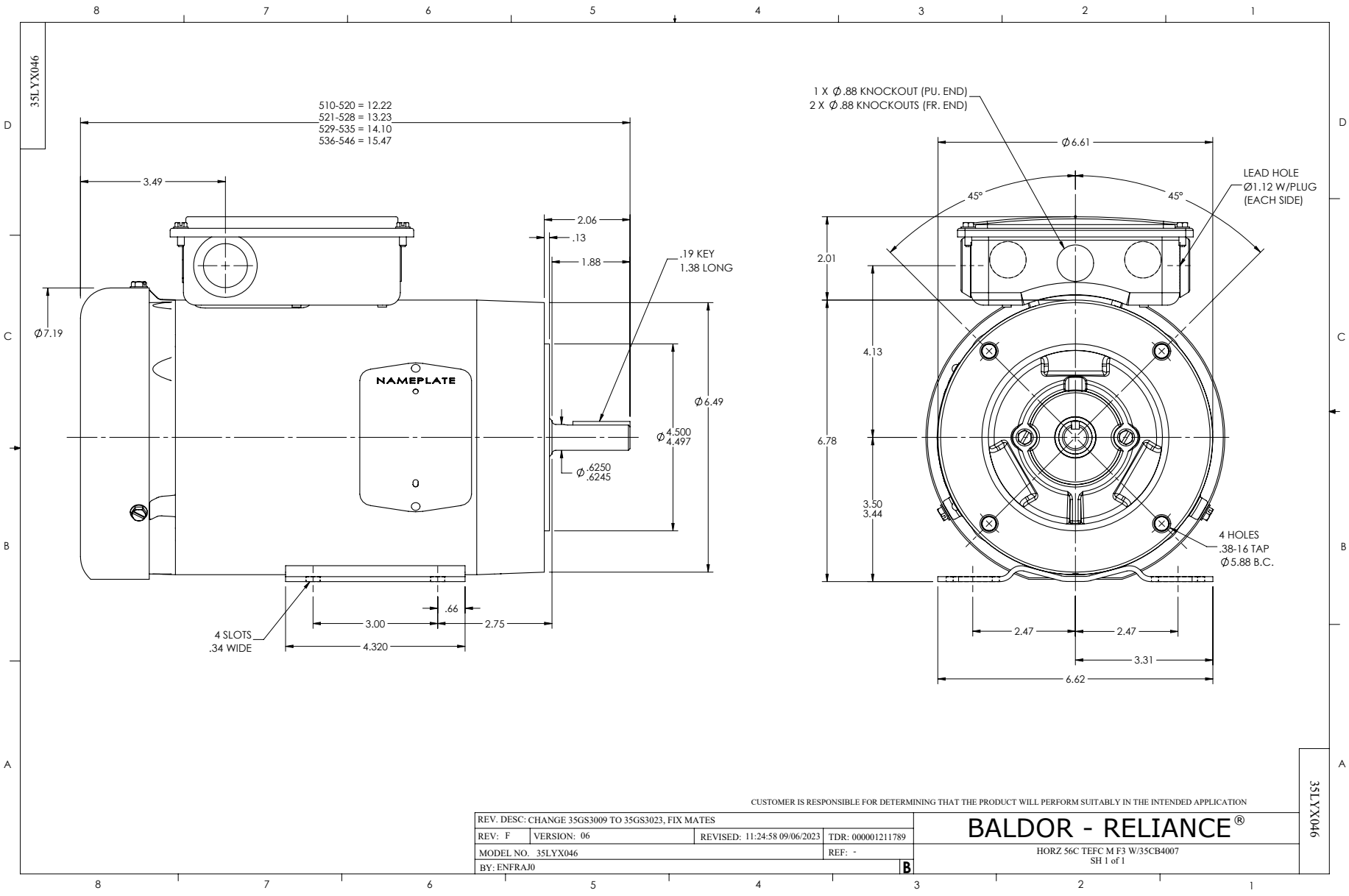
35LYX046
510-520 = 12.22
521-528 = 13.23
529-535 = 14.10
536-546 = 15.47
3.49
2.06
.13
1.88
.19 KEY
1.38 LONG
Ø7.19
NAMEPLATE
Ø6.49
Ø4.500
4.497
Ø.6250
.6245
.66
3.00
2.75
4 SLOTS
.34 WIDE
4.320
1 X Ø.88 KNOCKOUT (PU. END)
2 X Ø.88 KNOCKOUTS (FR. END)
Ø6.61
LEAD HOLE
Ø1.12 W/PLUG
(EACH SIDE)
45°
45°
2.01
4.13
6.78
3.50
3.44
4 HOLES
.38-16 TAP
Ø5.88 B.C.
2.47
2.47
3.31
6.62
CUSTOMER IS RESPONSIBLE FOR DETERMINING THAT THE PRODUCT WILL PERFORM SUITABLY IN THE INTENDED APPLICATION
REV. DESC: CHANGE 35GS3009 TO 35GS3023, FIX MATES
REV: F
VERSION: 06
REVISED: 11:24:58 09/06/2023
TDR: 000001211789
MODEL NO. 35LYX046
REF: -
BY: ENFRAJ0
B
BALDOR - RELIANCE®
HORZ 56C TEFC M F3 W/35CB4007
SH 1 of 1
35LYX046

CD0005

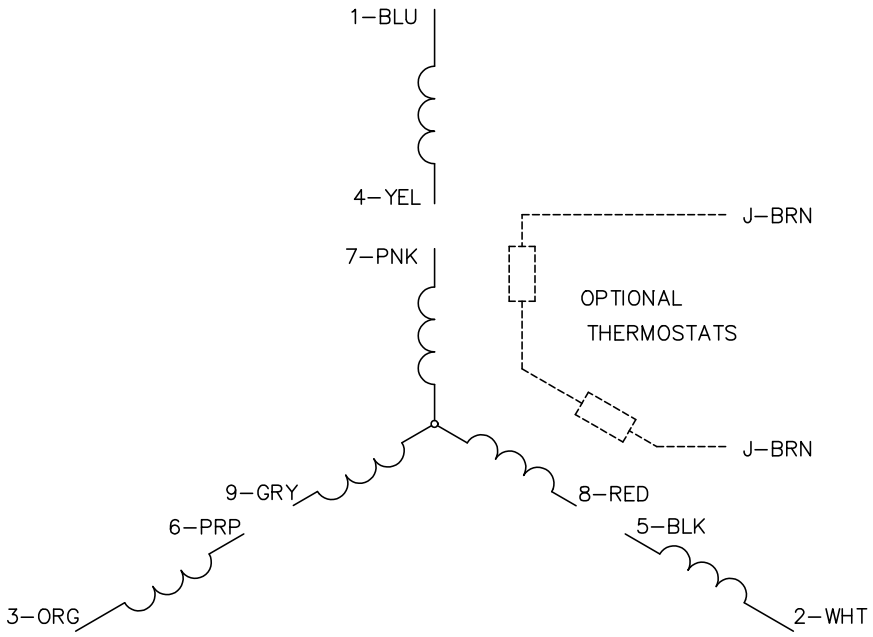

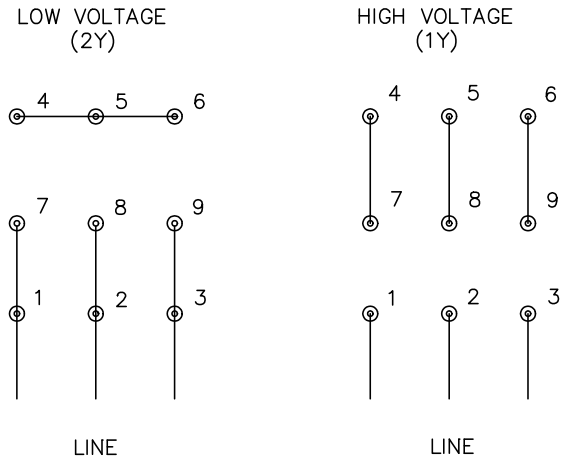

NOTES:

1. INTERCHANGE ANY TWO LINE LEADS TO REVERSE ROTATION.
2. OPTIONAL THERMOSTATS ARE PROVIDED WHEN SPECIFIED.
3. ACTUAL NUMBER OF INTERNAL PARALLEL CIRCUITS MAY BE A MULTIPLE OF THOSE SHOWN ABOVE.
4. LEAD COLORS ARE OPTIONAL. LEADS MUST ALWAYS BE NUMBERED AS SHOWN.

CD0005

REV. DESC: REVISE TO SHOW OPTIONAL COLORS			BALDOR ELECTRIC Co.
REV. LTR: E	BY: JLP	REVISED: 01/19/99 10:15	TDR: 0171435
CD0005		FILE: AAA00005140	MDL: –
		MTL: –	3PH, DV, 9 LEADS