39LYE119

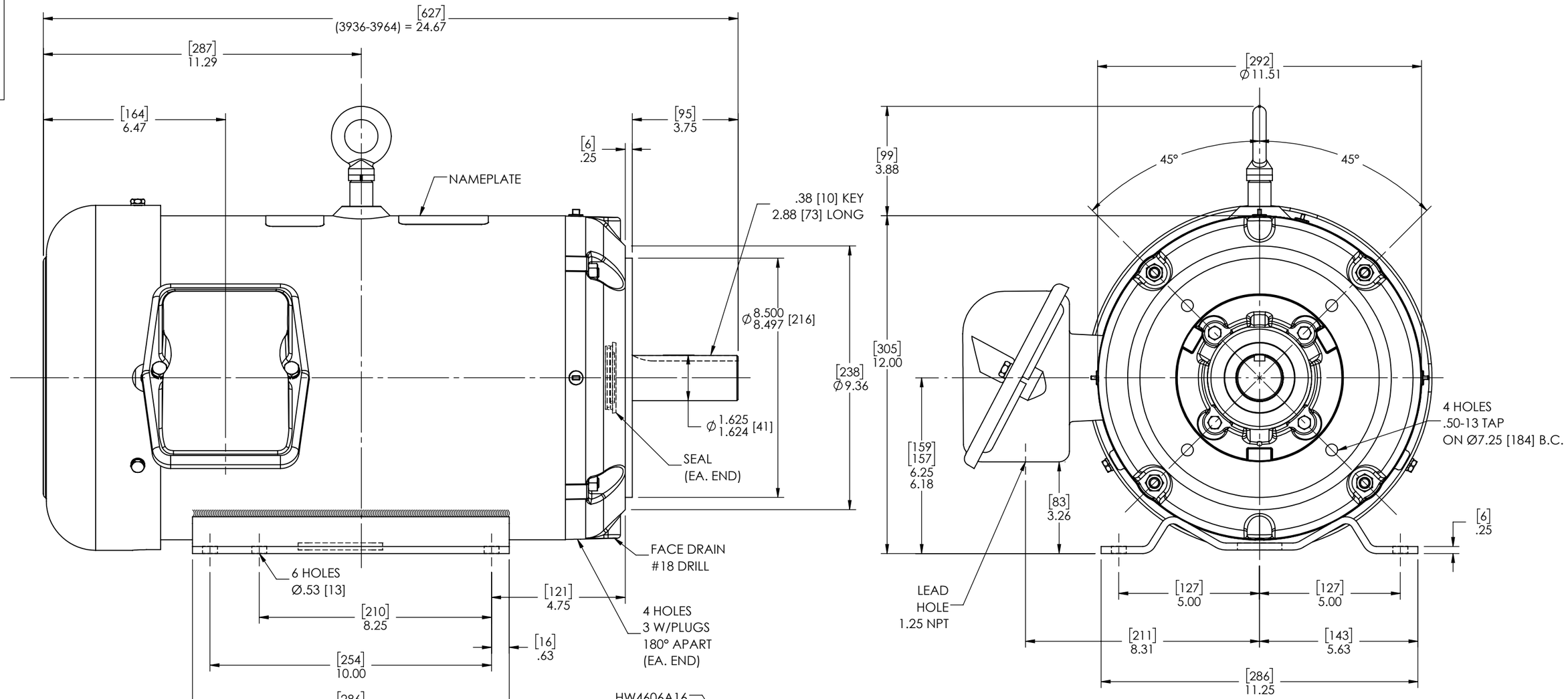

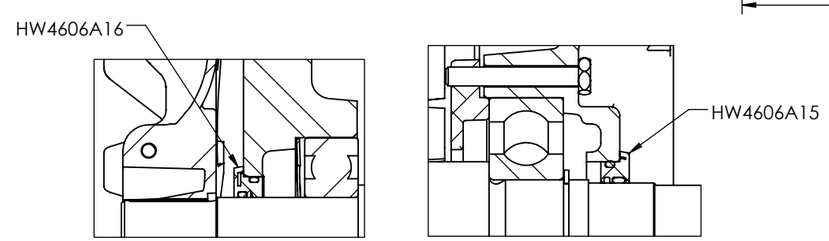

FRONT END DETAIL

PULLEY END DETAIL

CUSTOMER IS RESPONSIBLE FOR DETERMINING THAT THE PRODUCT WILL PERFORM SUITABLY IN THE INTENDED APPLICATION

REV. DESC: ADD METRIC DIMS			
REV: L	VERSION: 11	REVISED: 11:18:02 01/18/2022	TDR: 000001183866
MODEL NO. 39LYE119			REF: -
BY: USCOPIC1			B

BALDOR - RELIANCE®

HORZ TEFC 254-6TC WD4 ALL STAINLESS MOTOR, METRIC DIM

39LYE119