12LYF665

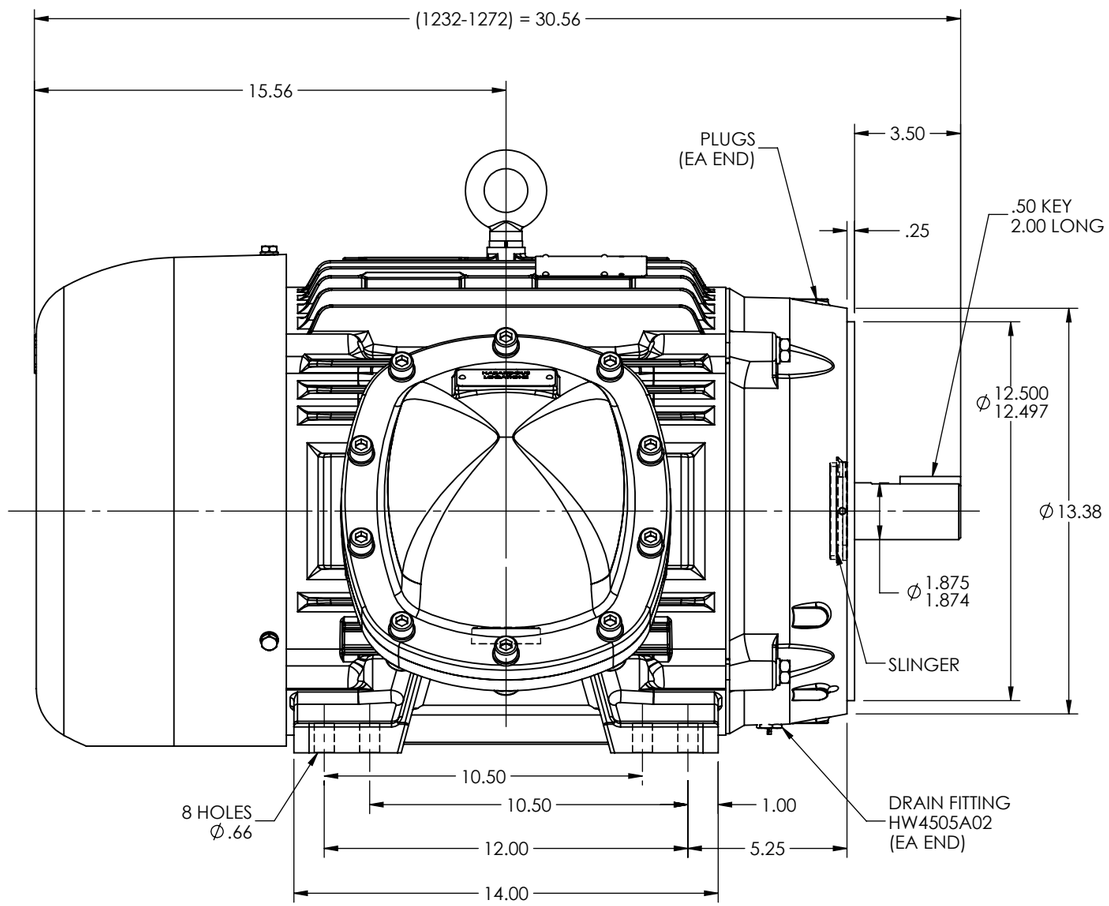

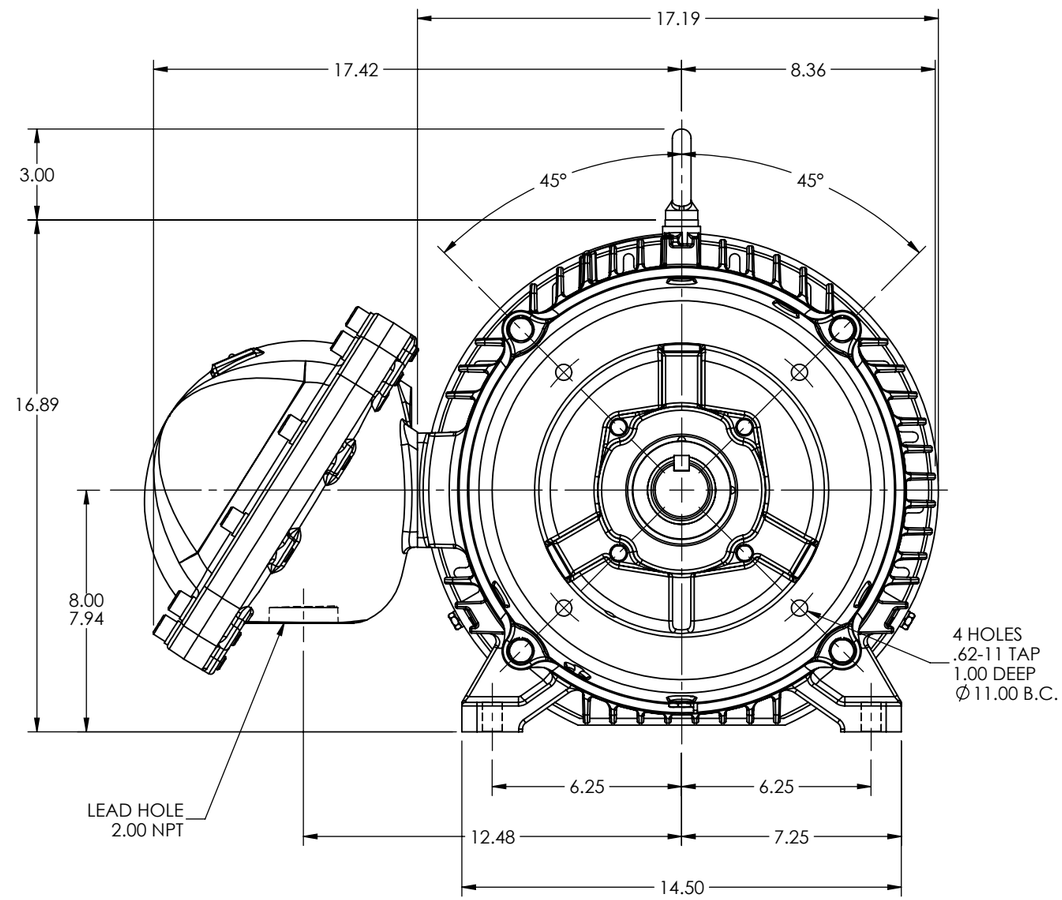

CUSTOMER IS RESPONSIBLE FOR DETERMINING THAT BALDOR'S PRODUCT WILL PERFORM SUITABLY IN THE INTENDED APPLICATION

REV. DESC: CONVERT STOCK LAYOUTS FROM AUTOCAD TO SWD			
REV: A	VERSION: 01	REVISED: 07:46:34 12/14/2023	TDR: 000001220227
MODEL NO. 12LYF665			REF: -
BY: USALMAZ			B

BALDOR

HORZ XPFC 324-6TSC CL.I,GP.C&D, DRILL RIG

12LYF665