ABB BALDOR RELIANCE

Customer information packet

CEM4310T-G

60HP, 3565RPM, 3PH, 60HZ, 364TSC, TEFC, F1
Class - None
Division - Not Applicable

Copyright © All product information within this document is subject to ABB Motors and Mechanical Inc. copyright © protection, unless otherwise noted.
11/27/2026 4:20:59 AM

Specifications

Enclosure	TEFC
Frame	364TSC
Frame Material	Iron
Frequency	60.00 Hz
Haz Area Class and Group	None
Haz Area Division	Not Applicable
Motor Letter Type	Three Phase
Output @ Frequency	60.000 HP @ 60 HZ
Phase	3
Synchronous Speed @ Frequency	3600 RPM @ 60 HZ
Voltage @ Frequency	230.0 V @ 60 HZ
	460.0 V @ 60 HZ
Agency Approvals	CSA EEV
	CCSA US
Ambient Temperature	40 °C
Auxiliary Box	NO AUXILLARY BOX
Base Indicator	Rigid
Bearing Grease Type	Polyrex EM (-20F +300F)
Current @ Voltage	134.000 A @ 230.0 V
	67.200 A @ 460.0 V
Design Code	B
Drip Cover	No Drip Cover
Duty Rating	CONT
Efficiency @ 100% Load	93.6 %
Feedback Device	NO FEEDBACK
Heater Indicator	No Heater
High Voltage Full Load Amps	67.2 a
Insulation Class	H
Inverter Code	Inverter Ready
IP Rating	NONE
KVA Code	G
Lifting Lugs	Standard Lifting Lugs

Part Detail

Revision	E
Type	AC
Mech. spec.	
Base	
Status	PRD/A
Elec. spec.	A36WG3648
Layout	617428-017
Eff. date	07-08-2024
CD Diagram	416820-002
Poles	02
Leads	3#4,6#6
Proprietary	False
Created date	08-20-2019

Motor Lead Quantity/Wire Size	3 @ 4 AWG
Motor Standards	NEMA
Motor Type	A36056M
Mounting Arrangement	F1
Number of Poles	2
Overall Length	31.31 IN
Power Factor	89
Product Family	General Industrial
Pulley End Bearing Type	Ball
Pulley Face Code	C-Face
Service Factor	1.15
Shaft Diameter	1.875 IN
Shaft Ground Indicator	Shaft Grounding
Shaft Rotation	Reversible
Shaft Slinger Indicator	Shaft Slinger
Speed	3565 rpm
Speed Code	Single Speed
Starting Method	Direct on line
Thermal Device - Bearing	None
Thermal Device - Winding	None

Nameplate

NP3979LUA

CAT #	CEM4310T-G	**SER**		**CC**	010A								
SPEC	A36-7788-3648	**RATING**	40C AMB-CONT										
HZ	**VOLTS**	**AMPS**	**RPM**	**HP**	**CODE**	**SF**	**DES**	**PF**		**NEMA NOM. EFF**			
60	230/460	134/67.2	3565	60	G	1.15	B	89	%	93.6	%		
	-								%		%		
PH	3	**CL**	H	**MAX CORR KVAR**	8.4								
BRG	**DE**	6313	**ODE**	6313	**ENCL**	TEFC	**FR**	364TSC					
GREASE	POLYREX EM					**MTR WT**	900	**LBS**					
USABLE AT	50HP 190/380V 133/66.5A					SF1.0							
INVERTER DUTY	**CT**	15-60	**HZ**	4:1	**VT**	3-60	**HZ**	20:1	**CHP**	60-75	**HZ**	1.25:1	**1.0 SF VPWM**
MAX RPM	4500												

REL. S.O.	FRAME	HP	TYPE	PHASE/ HERTZ	RPM	VOLTS
	364TSC	60	P	3/60	3565	230/460

AMPS	DUTY	AMB °C/ INSUL.	S.F.	NEMA DESIGN	CODE LETTER	ENCL.
134/67.2	CONT	40/H	1.15	B	G	TEFC

E/S	ROTOR	TEST S.O.	TEST DATE	STATOR RES.@25 °C OHMS (BETWEEN LINES)
591878	418141002XE	---	---	.0283/.113

PERFORMANCE

LOAD	HP	AMPERES	RPM	% POWER FACTOR	% EFFICIENCY
NO LOAD	0	16.7	3600	10.0	0
1/4	15.0	23.4	3591	67.9	88.6
2/4	30.0	35.9	3582	84.5	92.7
3/4	45.0	50.9	3572	88.4	93.6
4/4	60.0	67.2	3562	89.3	93.6
5/4	74.9	83.7	3552	89.9	93.2

SPEED TORQUE

	RPM	TORQUE % FULL LOAD	TORQUE LB.-FT.	AMPERES
LOCKED ROTOR	0	156	138	435
PULL UP	720	128	113	425
BREAKDOWN	3396	280	248	271
FULL LOAD	3562	100	88.5	67.2

AMPERES SHOWN FOR 460. VOLT CONNECTION. IF OTHER VOLTAGE CONNECTIONS ARE AVAILABLE, THE AMPERES WILL VARY INVERSELY WITH THE RATED VOLTAGE

REMARKS: TYPICAL DATA
XE MOTOR-NEMA NOM. EFF. 93.6 %

REL S.O.		RPM	3565	S.F.	1.15	ROTOR	418141002XE
FRAME	364TSC	VOLTS	230/460	NEMA DESIGN	B	TEST S.O.	TYPICAL DATA
HP	60	AMPS	134/67.2	CODE LETTER	G	TEST DATE	---
TYPE	P	DUTY	CONT	ENCLOSURE	TEFC	STATOR RES.@ 25 °C	.0283/.113
PHASE/HERTZ	3/60	AMB °C/INSUL	40/H	E/S	591878		OHMS (BETWEEN LINES)

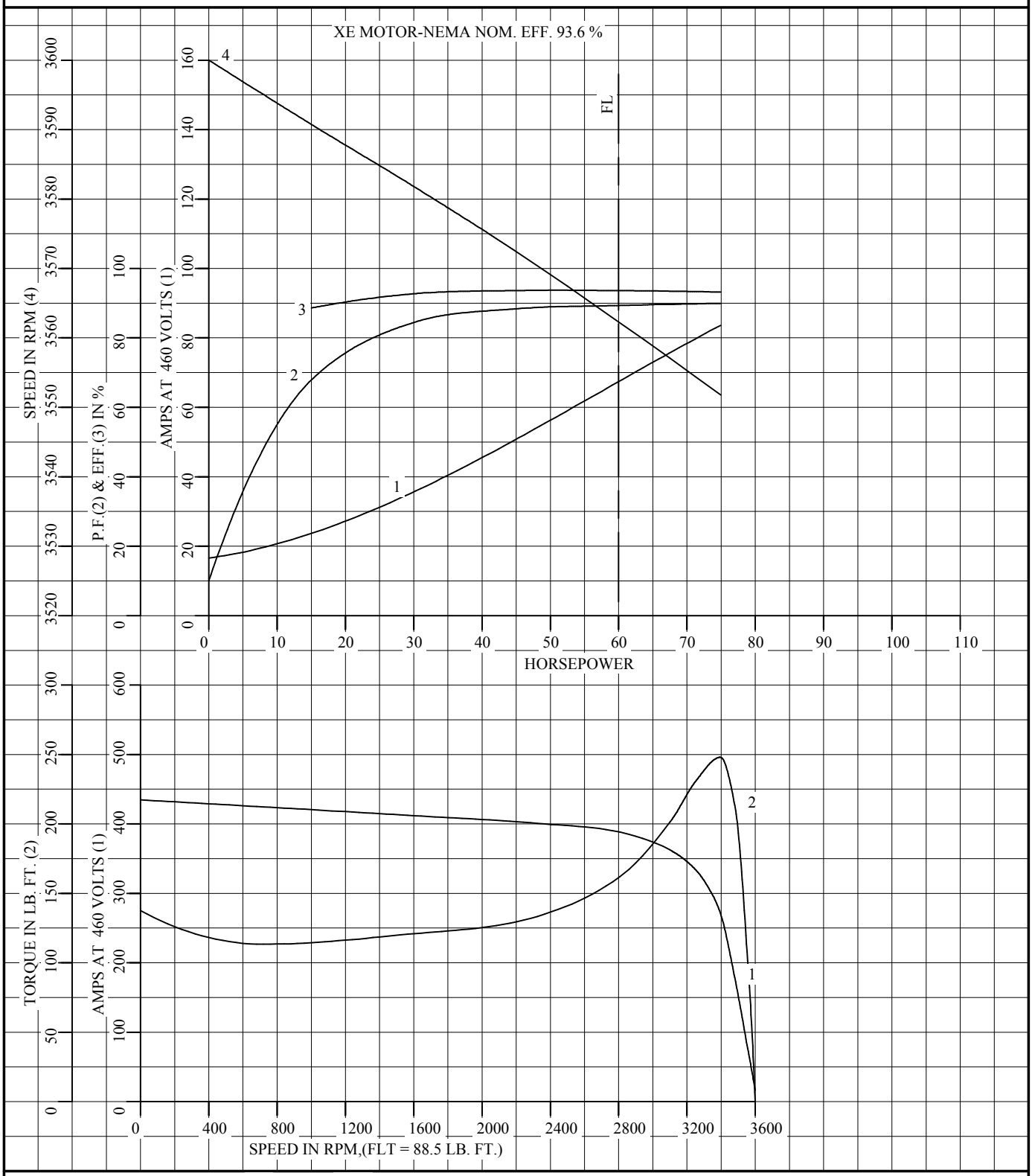

AMPERES SHOWN FOR 460 VOLT CONNECTION, IF OTHER VOLTAGE CONNECTIONS ARE AVAILABLE, THE AMPERES WILL VARY INVERSELY WITH THE RATED VOLTAGE.

BALDOR
A MEMBER OF THE ABB GROUP

DR. BY	J. P. TSAO
CK. BY	W .L. SMITH
APP. BY	E.J.CHRISTIAN
DATE	08/02/16

A–C MOTOR PERFORMANCE CURVES

A36WG3648-R009

ISSUE DATE 08/20/19

REL. S.O.	RPM 3565	S.F. 1.15	ROTOR 418141002XE
FRAME 364TSC	VOLTS 230/460	NEMA DESIGN B	TEST S.O. TYPICAL DATA
HP 60	AMPS 134/67.2	CODE LETTER G	TEST DATE ---
TYPE P	DUTY CONT	ENCLOSURE TEFC	STATOR RES.@ 25 ℃.0283/.113
PHASE/HERTZ 3/60	AMB ℃/INSUL 40/H	E/S 591878	OHMS (BETWEEN LINES)

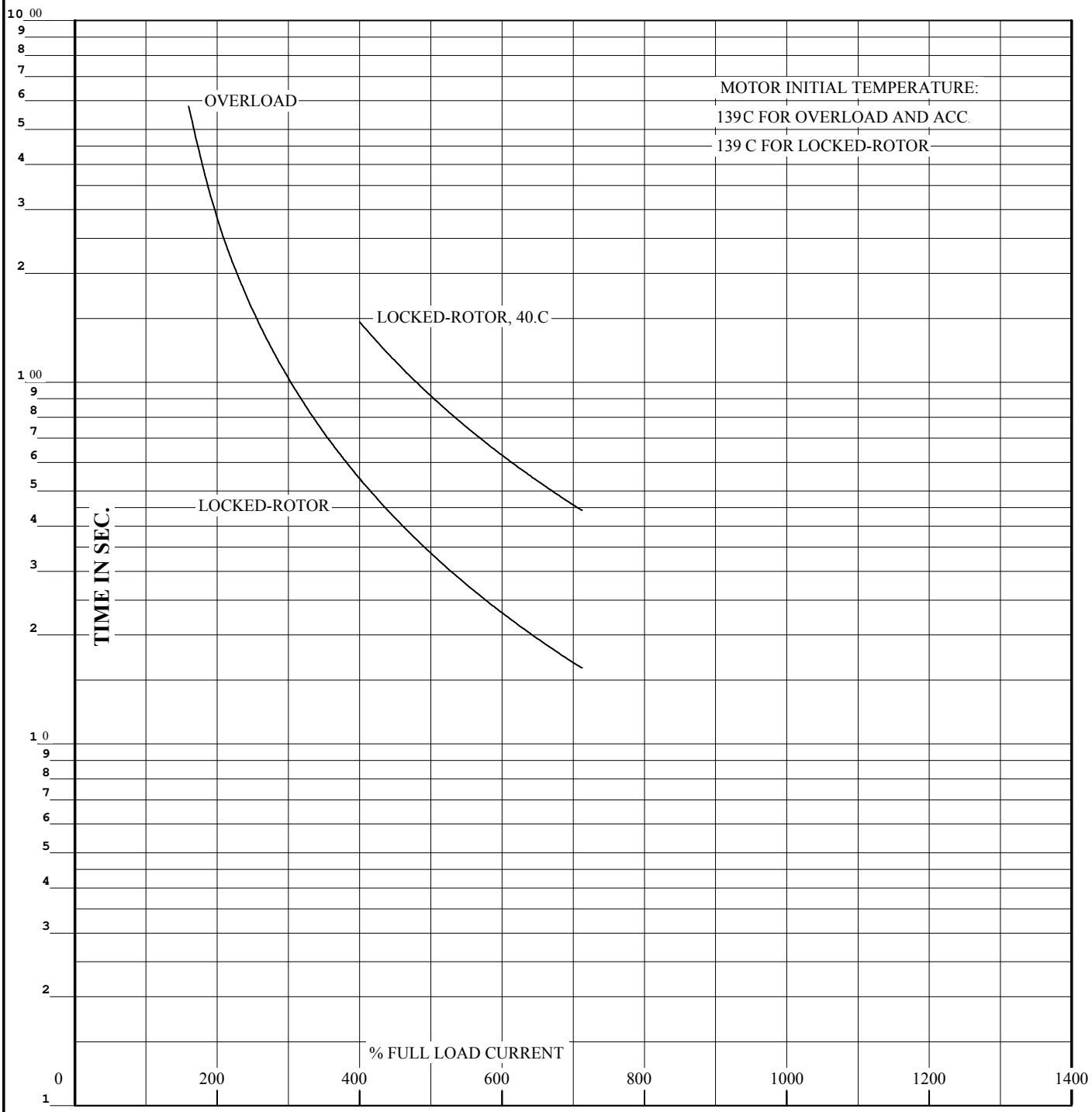

THERMAL LIMIT CURVE

REMARKS: XE MOTOR-NEMA NOM. EFF. 93.6 %

AMPERES SHOWN FOR 460 **VOLT CONNECTION, IF OTHER VOLTAGE CONNECTIONS ARE AVAILABLE, THE AMPERES WILL VARY INVERSELY WITH THE RATED VOLTAGE.**

617428-017

DUTY MASTER ALTERNATING CURRENT MOTORS

SQUIRREL-CAGE INDUCTION
CAST IRON CONSTRUCTION

ENCLOSURE: TOTALLY ENCLOSED
MOUNTING: FOOT

FRAMES 364TSC-365TSC

COOLING: FAN COOLED

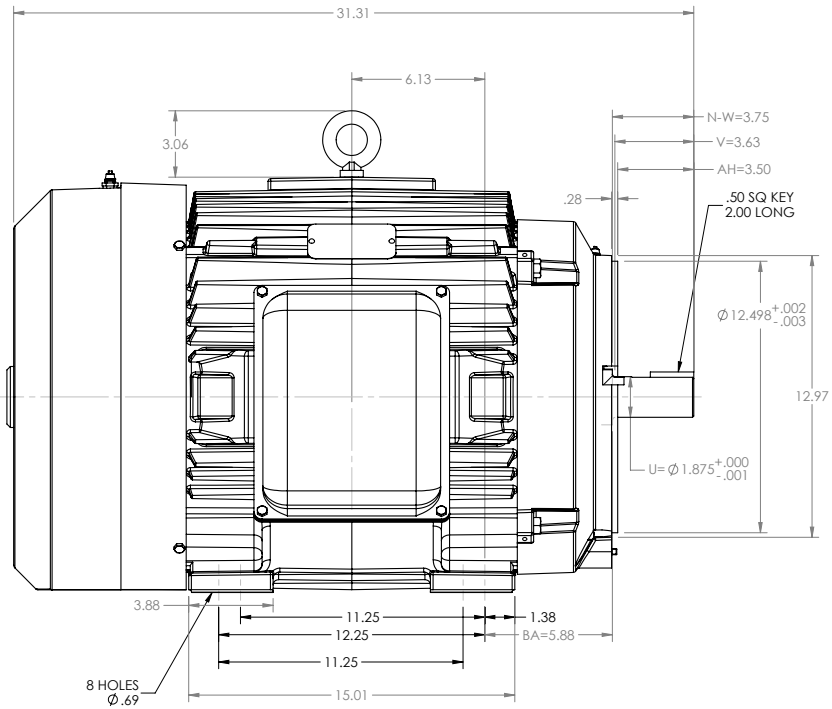

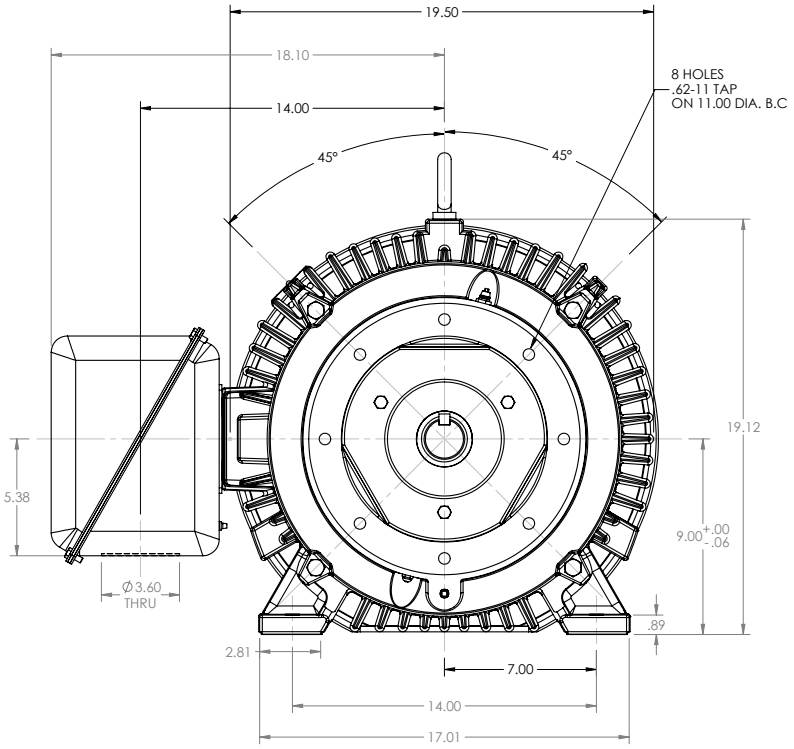

MAXIMUM PERMISSIBLE SHAFT RUNOUT WHEN MEASURED AT END OF STD. SHAFT EXTENSION IS .002 T.I.R. UP TO AND INCLUDING 1.625 DIA AND .003 T.I.R. 1.625 DIA. TO 5 INCH DIA.

WEIGHT (LBS): 364TSC = 809
365TSC = 849

MOTOR WEIGHTS MAY VARY BY 15% DEPENDING UPON RATING.

CUSTOMER IS RESPONSIBLE FOR DETERMINING THAT BALDOR'S PRODUCT WILL PERFORM SUITABLY IN THE INTENDED APPLICATION

REV. DESC: UPDATE DRAWING TO HAVE CORRECT "AH"			
REV: D	VERSION: 04	REVISED: 01:59:50 10/05/2015	TDR: 000000947176
MODEL NO. 617428-017			REF:
BY: RAGJSS1			B

BALDOR

DIM SHEET 364-5TSC TEFC (611740-003-SH1)

617428-017

416820-002

A-C MOTOR
CONNECTION DIAGRAM
STANDARD 9 LEAD DELTA-CONNECTED

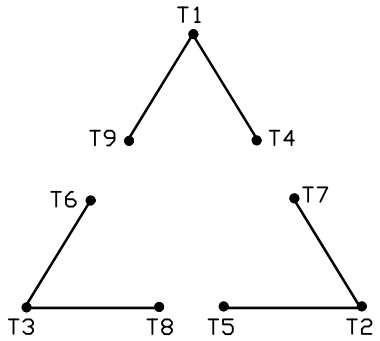

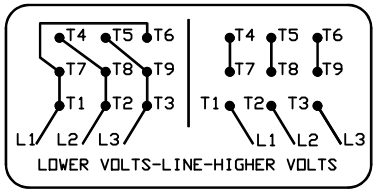

(N. P. 1575-B)

REV. DESC: ADJUST TEXT DARKNESS		
REV. LTR: B	VERSION: 02	TDR: 000001285318
FILE: \RAG\00022\453	REVISED: 09:36:26 09/24/2026	BY: USJOSUL
MTL: –		

ABB

CONN DIAG – STANDARD 9 LEAD, DELTA-CONNECTED

SH1 of 1

416820-002