ABB BALDOR RELIANCE

Customer information packet

CEM4111T-G

25HP, 1180RPM, 3PH, 60HZ, 324TC, TEFC, F1
Class - None
Division - Not Applicable

Copyright © All product information within this document is subject to ABB Motors and Mechanical Inc. copyright © protection, unless otherwise noted.
11/26/2026 1:59:16 PM

Specifications

Enclosure	TEFC
Frame	324TC
Frame Material	Iron
Frequency	60.00 Hz
Haz Area Class and Group	None
Haz Area Division	Not Applicable
Motor Letter Type	Three Phase
Output @ Frequency	25.000 HP @ 60 HZ
Phase	3
Synchronous Speed @ Frequency	1200 RPM @ 60 HZ
Voltage @ Frequency	230.0 V @ 60 HZ
	460.0 V @ 60 HZ
Agency Approvals	CSA
	CSA EEV
	NEMA PREMIUM
	UR
Ambient Temperature	40 °C
Auxiliary Box	NO AUXILLARY BOX
Auxiliary Box Lead Termination	None
Base Indicator	Rigid
Bearing Grease Type	Polyrex EM (-20F +300F)
Blower	None
Current @ Voltage	63.000 A @ 230.0 V
	32.000 A @ 460.0 V
Design Code	A
Drip Cover	No Drip Cover
Duty Rating	CONT
Efficiency @ 100% Load	93.0 %
Electrically Isolated Bearing	Not Electrically Isolated
Feedback Device	NO FEEDBACK
Heater Indicator	No Heater
High Voltage Full Load Amps	32.0 a

Part Detail

Revision	J
Type	AC
Mech. spec.	
Base	
Status	PRD/A
Elec. spec.	12WGY116
Layout	12LYH471
Eff. date	06-11-2025
CD Diagram	CD0180
Poles	06
Leads	9#8
Proprietary	False
Created date	03-06-2020

Insulation Class	H
Inverter Code	Inverter Duty
IP Rating	NONE
KVA Code	H
Lifting Lugs	Standard Lifting Lugs
Locked Bearing Indicator	Locked Bearing
Motor Lead Termination	Flying Leads
Motor Standards	NEMA
Motor Type	1260M
Mounting Arrangement	F1
Number of Poles	6
Overall Length	30.28 IN
Power Factor	79
Product Family	General Purpose
Pulley Face Code	C-Face
Rodent Screen	None
Service Factor	1.15
Shaft Diameter	2.125 IN
Shaft Ground Indicator	Shaft Grounding
Shaft Rotation	Reversible
Speed	1180 rpm
Speed Code	Single Speed
Starting Method	Direct on line
Thermal Device - Bearing	None
Thermal Device - Winding	None
Vibration Sensor Indicator	No Vibration Sensor
Winding Thermal 1	None
Winding Thermal 2	None

Nameplate

NP3443LUA												
CAT.NO.	CEM4111T-G			**CUST. P/N**						**ENCL**	TEFC	
SPEC.	12-0000-1537	**CC**	010A	**FRAME**	324TC		**SER.NO.**					
HP	25		**CLASS**	H	**HZ**	60						
R.P.M.	1180		**PH.**	3	**DES.**	A						
VOLTS	230/460			**CODE**	H		**ODE BRG**	6311	**DE BRG**	6312		
AMPS	63/32											
RATING	40C AMB-CONT			**NEMA NOM. EFF.**	93			**GREASE**	POLYREX EM			
P.F.	79	**SER.F.**	1.15	**CT6-60H(10:1)VT3-60H(20:1**								
USABLE AT	50HZ 25HP 190/380V 76/38A			SF1.0								
VOLTS	**AMPS**		**MAX. SPACE HEATER TEMP.**									

AC Induction Motor Performance Data
Record # 47247
Typical performance - not guaranteed values

Winding: 12WGY116-R017	**Type:** 1260M	**Enclosure:** TEFC

Nameplate Data				**460 V, 60 Hz: High Voltage Connection**	
Rated Output (HP)			25	**Full Load Torque**	111 LB-FT
Volts			230/460	**Start Configuration**	direct on line
Full Load Amps			63/32	**Breakdown Torque**	308 LB-FT
R.P.M.			1180	**Pull-up Torque**	117 LB-FT
Hz	60	**Phase**	3	**Locked-rotor Torque**	171 LB-FT
NEMA Design Code	A	**KVA Code**	H	**Starting Current**	198 A
Service Factor (S.F.)			1.15	**No-load Current**	13.8 A
NEMA Nom. Eff.	93	**Power Factor**	79	**Line-line Res. @ 25ºC**	0.27033 Ω
Rating - Duty			40C AMB-CONT	**Temp. Rise @ Rated Load**	46°C
S.F. Amps				**Temp. Rise @ S.F. Load**	56°C
				Rotor inertia	11.5 LB-FT2

Load Characteristics 460 V, 60 Hz, 25 HP

% of Rated Load	**25**	**50**	**75**	**100**	**125**	**150**	**S.F.**
Power Factor	43	65	75	79	81	81	80
Efficiency	89.1	92.8	93.5	93.2	92.6	91.5	92.8
Speed	1195.4	1191.8	1188.2	1183.9	1179.3	1172.9	1181
Line amperes	15.6	19.7	25.4	31.9	39.2	49.1	36.3

ABB Motors and Mechanical Inc.

WINDING # 12WGY116

25 HP 3 PH 60 HZ 1180 RPM 460 V 1260M

Typical performance - not guaranteed values.

TORQUES(LB-FT): PO=308 PU=117 LR=171 LRA=198

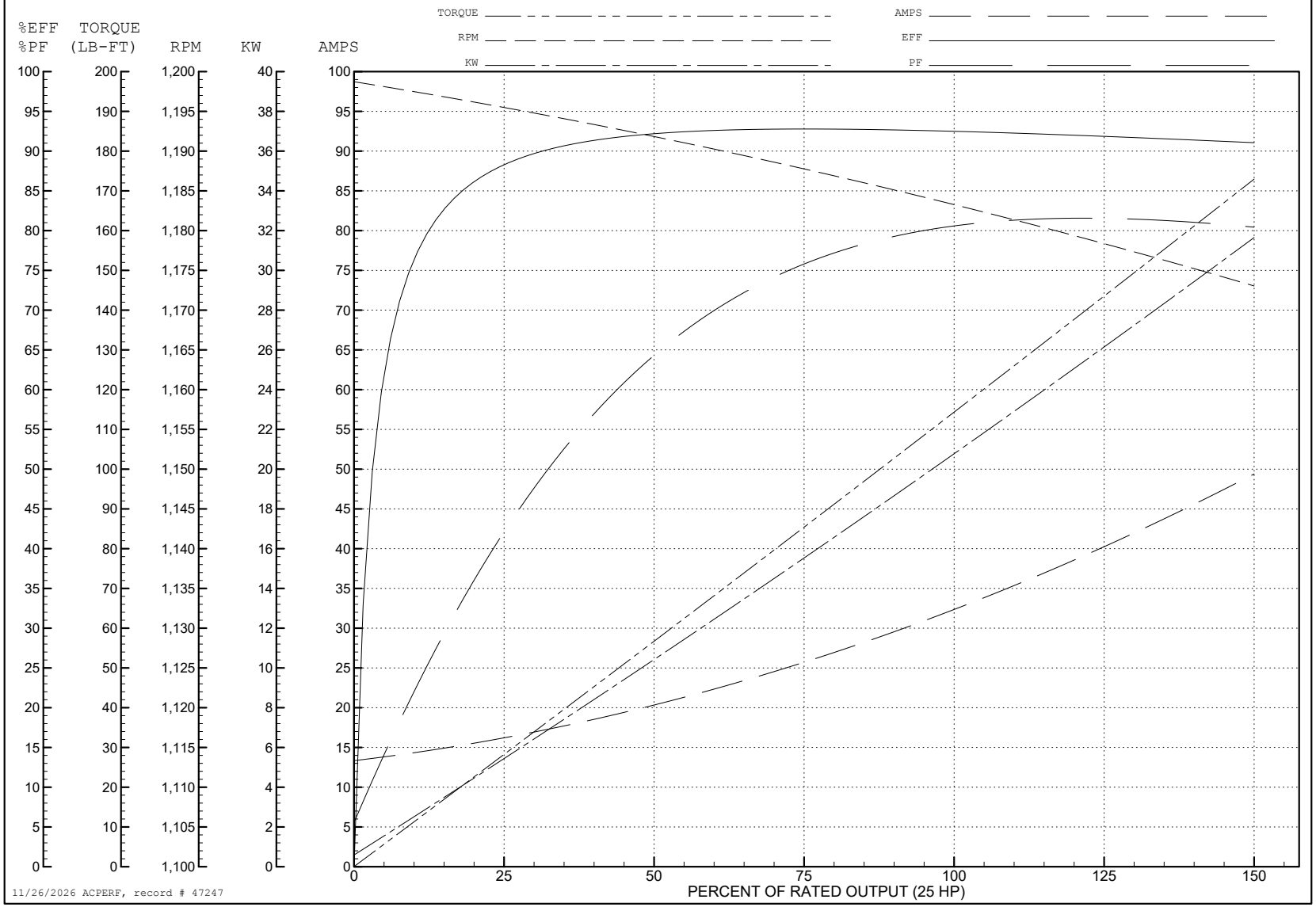

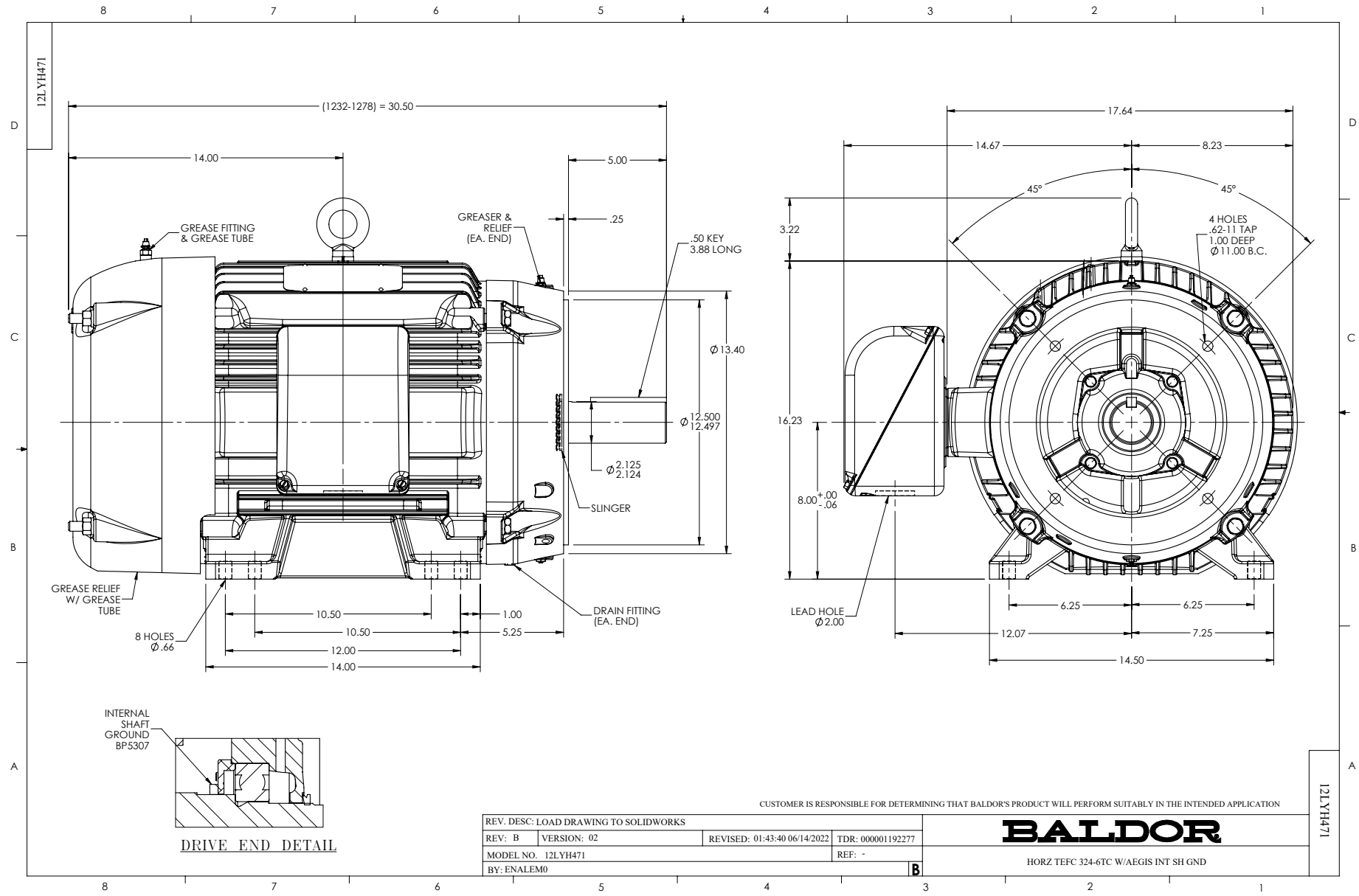
12LYH471
(1232-1278) = 30.50
14.00
5.00
.25
GREASE FITTING & GREASE TUBE
GREASER & RELIEF (EA. END)
.50 KEY 3.88 LONG
Ø 13.40
Ø 12.500 12.497
Ø 2.125 2.124
SLINGER
GREASE RELIEF W/ GREASE TUBE
8 HOLES Ø .66
10.50
10.50
12.00
14.00
1.00
5.25
DRAIN FITTING (EA. END)
17.64
14.67
8.23
45°
45°
3.22
4 HOLES .62-11 TAP 1.00 DEEP Ø 11.00 B.C.
16.23
8.00 +.00 -.06
LEAD HOLE Ø 2.00
6.25
6.25
12.07
7.25
14.50
INTERNAL SHAFT GROUND BP5307
DRIVE END DETAIL
CUSTOMER IS RESPONSIBLE FOR DETERMINING THAT BALDOR'S PRODUCT WILL PERFORM SUITABLY IN THE INTENDED APPLICATION
REV. DESC: LOAD DRAWING TO SOLIDWORKS
REV: B
VERSION: 02
REVISED: 01:43:40 06/14/2022
TDR: 000001192277
MODEL NO. 12LYH471
REF: -
BY: ENALEM0
B
BALDOR
HORZ TEFC 324-6TC W/AEGIS INT SH GND
12LYH471

CD0180

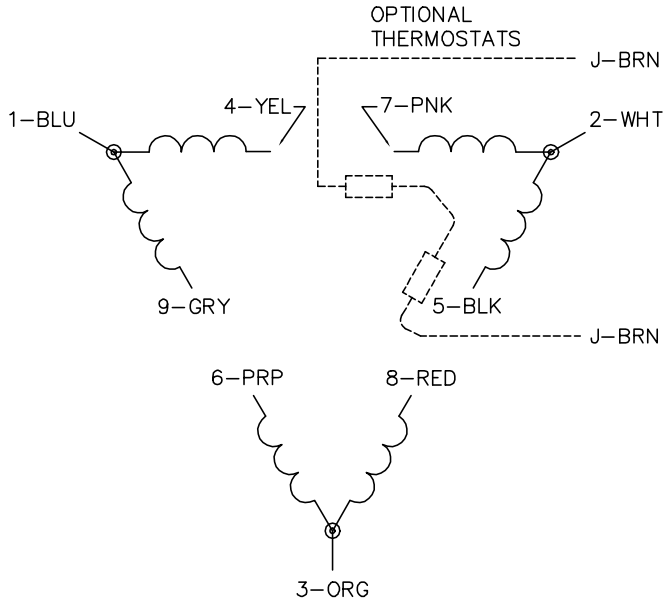

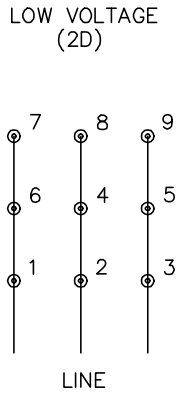

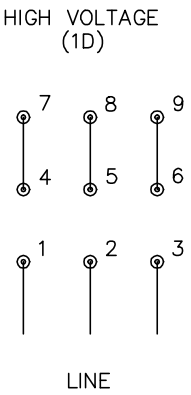

NOTES:

1. INTERCHANGE ANY TWO LINE LEADS TO REVERSE ROTATION.
2. OPTIONAL THERMOSTATS ARE PROVIDED WHEN SPECIFIED.
3. ACTUAL NUMBER OF INTERNAL PARALLEL CIRCUITS MAY BE A MULTIPLE OF THOSE SHOWN ABOVE.
4. LEAD COLORS ARE OPTIONAL. LEADS MUST ALWAYS BE NUMBERED AS SHOWN.

CD0180

REV. DESC: ADD CLASS CONN00000007		
REV. LTR: D	VERSION: 01	TDR: 000001099922
FILE: \AAA\00005\148	REVISED: 10:25:29 02/19/2019	BY: ENBRIR0
MTL: –		

BALDOR - RELIANCE®

3PH, DV, 9 LEADS, DELTA CONNECTION

SH 1 of 1