ABB BALDOR RELIANCE

Customer information packet

CEM4109T

40HP, 3530RPM, 3PH, 60HZ, 324TSC, 1058M, TEFC
Class - None
Division - Not Applicable

Copyright © All product information within this document is subject to ABB Motors and Mechanical Inc. copyright © protection, unless otherwise noted.
11/27/2026 9:03:51 PM

Specifications

Enclosure	TEFC
Frame	324TSC
Frame Material	Iron
Frequency	60.00 Hz
Haz Area Class and Group	None
Haz Area Division	Not Applicable
Motor Letter Type	Three Phase
Output @ Frequency	40.000 HP @ 60 HZ
Phase	3
Synchronous Speed @ Frequency	3600 RPM @ 60 HZ
Voltage @ Frequency	230.0 V @ 60 HZ
	460.0 V @ 60 HZ
Agency Approvals	NEMA PREMIUM
	NEMA PREMIUM (OLD LOGO)
	CURUSEEV
Ambient Temperature	40 °C
Auxiliary Box	NO AUXILLARY BOX
Auxiliary Box Lead Termination	None
Base Indicator	Rigid
Bearing Grease Type	Polyrex EM (-20F +300F)
Blower	None
Current @ Voltage	100.000 A @ 208.0 V
	45.000 A @ 460.0 V
	90.000 A @ 230.0 V
Design Code	A
Drip Cover	No Drip Cover
Duty Rating	CONT
Efficiency @ 100% Load	92.4 %
Electrically Isolated Bearing	Not Electrically Isolated
Feedback Device	NO FEEDBACK
Front Shaft Indicator	None
Heater Indicator	No Heater

Part Detail

Revision	F
Type	AC
Mech. spec.	10F423
Base	
Status	PRD/A
Elec. spec.	10WGY652
Layout	10LYF423
Eff. date	06-27-2024
CD Diagram	CD0180
Poles	02
Leads	9#8
Proprietary	False
Created date	05-25-2018

High Voltage Full Load Amps	45.0 a
Insulation Class	F
Inverter Code	Inverter Ready
KVA Code	H
Lifting Lugs	Standard Lifting Lugs
Locked Bearing Indicator	Locked Bearing
Motor Lead Quantity/Wire Size	9 @ 8 AWG
Motor Lead Termination	Flying Leads
Motor Standards	NEMA
Motor Type	1058M
Mounting Arrangement	F1
Number of Poles	2
Overall Length	28.94 IN
Power Factor	90
Product Family	General Purpose
Pulley End Bearing Type	Ball
Pulley Face Code	C-Face
Pulley Shaft Indicator	Standard
Rodent Screen	None
Service Factor	1.15
Shaft Diameter	1.875 IN
Shaft Ground Indicator	No Shaft Grounding
Shaft Rotation	Reversible
Shaft Slinger Indicator	Shaft Slinger
Speed	3530 rpm
Speed Code	Single Speed
Starting Method	Direct on line
Thermal Device - Bearing	None
Thermal Device - Winding	None
Vibration Sensor Indicator	No Vibration Sensor
Winding Thermal 1	None
Winding Thermal 2	None

Nameplate

NP3443LUA												
CAT.NO.	CEM4109T			**CUST. P/N**						**ENCL**	TEFC	
SPEC.	10F423Y652G1	**CC**	010A	**FRAME**	324TSC		**SER.NO.**					
HP	40		**CLASS**	F	**HZ**	60						
R.P.M.	3530		**PH.**	3	**DES.**	A						
VOLTS	230/460			**CODE**	H		**ODE BRG**	6309	**DE BRG**	6312		
AMPS	90/45											
RATING	40C AMB-CONT			**NEMA NOM. EFF.**	92.4			**GREASE**	POLYREX EM			
P.F.	90	**SER.F.**	1.15	**CT6-60H(10:1)VT3-60H(20:1**								
USABLE AT	50Hz 40HP 190/380V 110/55A			SF1.0								
VOLTS	**AMPS**		**MAX. SPACE HEATER TEMP.**									

AC Induction Motor Performance Data
Record # 30898
Typical performance - not guaranteed values

Winding: 10WGY652-R001	**Type:** 1058M	**Enclosure:** TEFC

Nameplate Data				**460 V, 60 Hz: High Voltage Connection**	
Rated Output (HP)			40	**Full Load Torque**	59.5 LB-FT
Volts			230/460	**Start Configuration**	direct on line
Full Load Amps			90/45	**Breakdown Torque**	197 LB-FT
R.P.M.			3525	**Pull-up Torque**	85.4 LB-FT
Hz	60	**Phase**	3	**Locked-rotor Torque**	125 LB-FT
NEMA Design Code	A	**KVA Code**	H	**Starting Current**	324 A
Service Factor (S.F.)			1.15	**No-load Current**	12 A
NEMA Nom. Eff.	92.4	**Power Factor**	90	**Line-line Res. @ 25ºC**	0.159 Ω
Rating - Duty			40C AMB-CONT	**Temp. Rise @ Rated Load**	78°C
S.F. Amps				**Temp. Rise @ S.F. Load**	96°C
				Locked-rotor Power Factor	22.8
				Rotor inertia	2.49 LB-FT2

Load Characteristics 460 V, 60 Hz, 40 HP

% of Rated Load	**25**	**50**	**75**	**100**	**125**	**150**	**S.F.**
Power Factor	65	82	88	90	90	91	90
Efficiency	88.6	92	92.8	92.6	91.9	90.8	92.7
Speed	3583	3567	3550	3531	3511	3485	3519
Line amperes	16.3	24.7	34.3	45.1	56.3	70.6	51.8

ABB Motors and Mechanical Inc.

WINDING # 10WGY652

40 HP 3 PH 60 HZ 3525 RPM 460 V 1058M

Typical performance - not guaranteed values.

TORQUES(LB-FT): PO=197 PU=85.4 LR=125 LRA=324

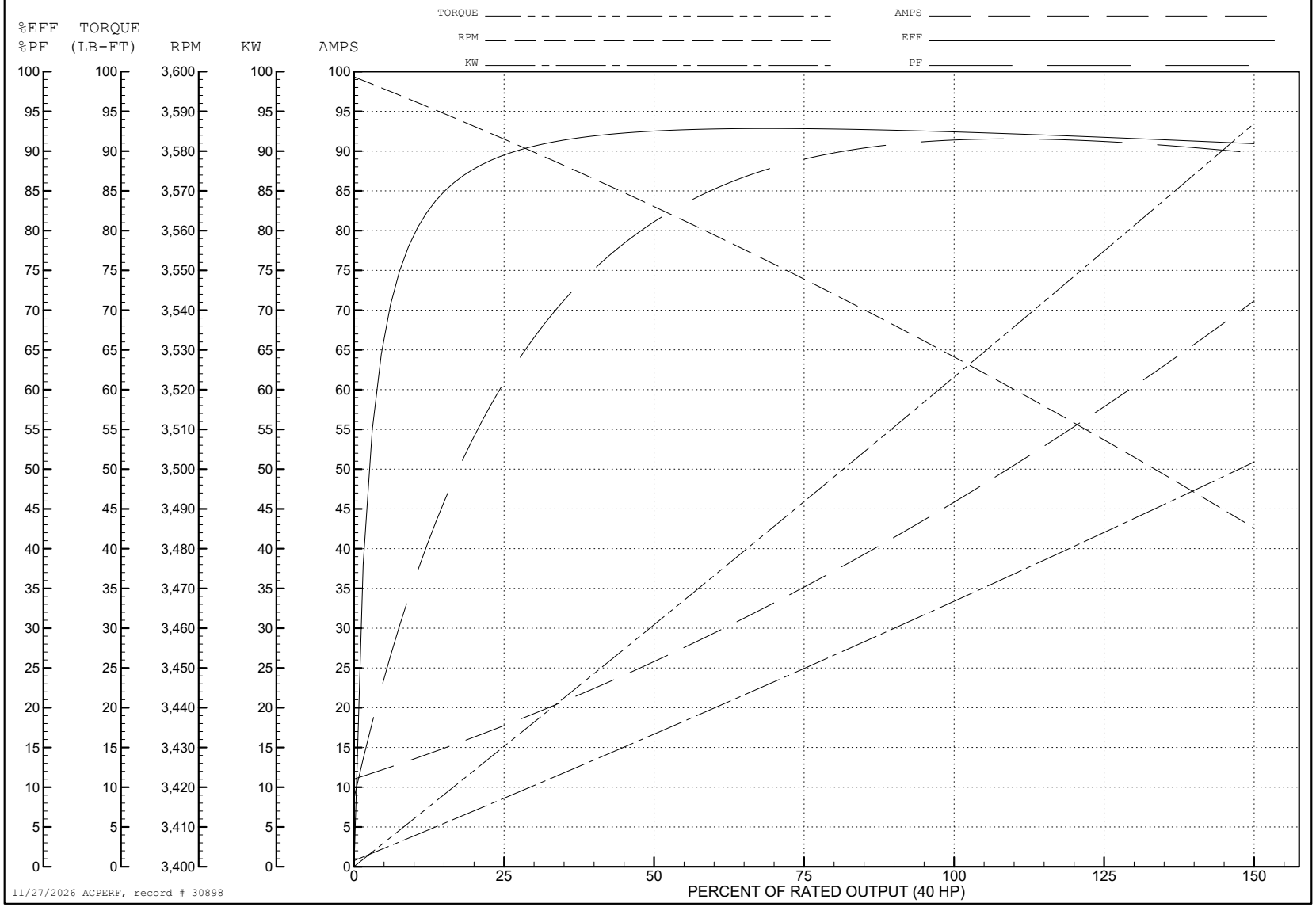

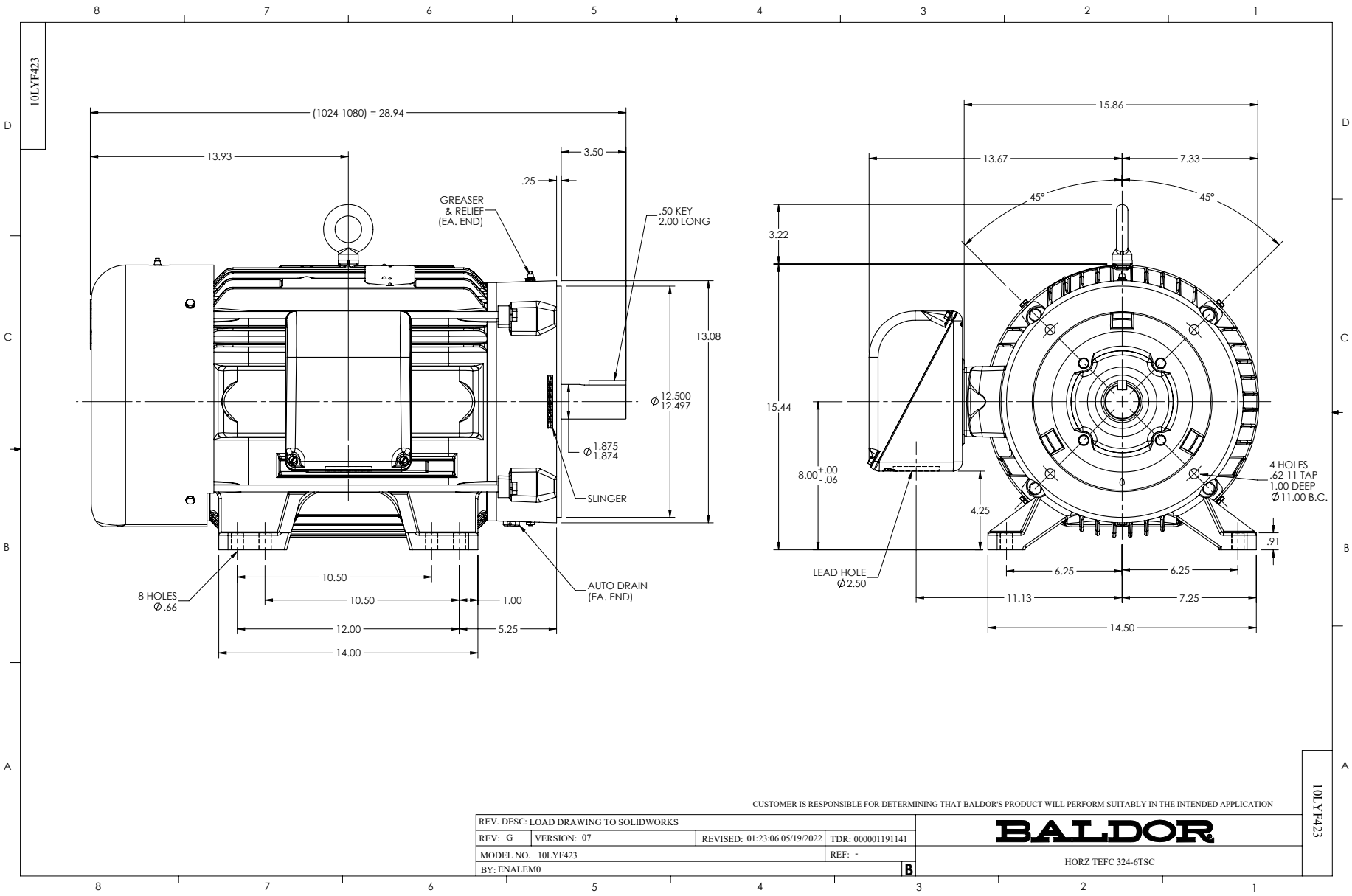
10LYF423
(1024-1080) = 28.94
13.93
3.50
.25
GREASER & RELIEF (EA. END)
.50 KEY 2.00 LONG
13.08
Ø 12.500 12.497
Ø 1.875 1.874
SLINGER
8 HOLES Ø.66
10.50
10.50
1.00
12.00
5.25
14.00
AUTO DRAIN (EA. END)
15.86
13.67
7.33
45°
45°
3.22
15.44
8.00 +.00 -.06
4.25
.91
4 HOLES .62-11 TAP 1.00 DEEP Ø11.00 B.C.
LEAD HOLE Ø2.50
6.25
6.25
11.13
7.25
14.50
CUSTOMER IS RESPONSIBLE FOR DETERMINING THAT BALDOR'S PRODUCT WILL PERFORM SUITABLY IN THE INTENDED APPLICATION
REV. DESC: LOAD DRAWING TO SOLIDWORKS
REV: G
VERSION: 07
REVISED: 01:23:06 05/19/2022
TDR: 000001191141
MODEL NO. 10LYF423
REF: -
BY: ENALEM0
B
BALDOR
HORZ TEFC 324-6TSC
10LYF423

CD0180

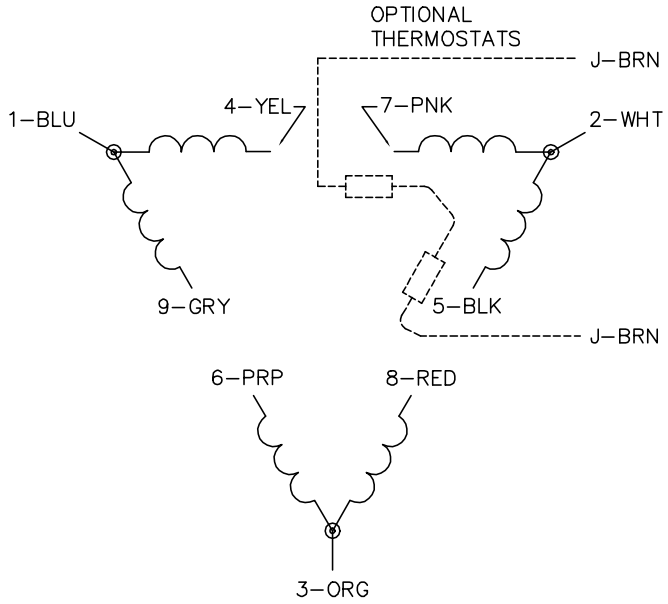

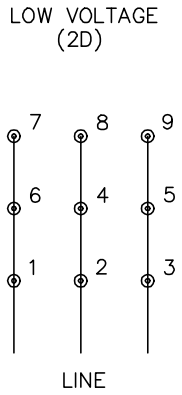

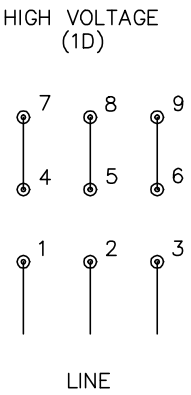

NOTES:

1. INTERCHANGE ANY TWO LINE LEADS TO REVERSE ROTATION.
2. OPTIONAL THERMOSTATS ARE PROVIDED WHEN SPECIFIED.
3. ACTUAL NUMBER OF INTERNAL PARALLEL CIRCUITS MAY BE A MULTIPLE OF THOSE SHOWN ABOVE.
4. LEAD COLORS ARE OPTIONAL. LEADS MUST ALWAYS BE NUMBERED AS SHOWN.

CD0180

REV. DESC: ADD CLASS CONN00000007		
REV. LTR: D	VERSION: 01	TDR: 000001099922
FILE: \AAA\00005\148	REVISED: 10:25:29 02/19/2019	BY: ENBRIR0
MTL: –		

BALDOR - RELIANCE®

3PH, DV, 9 LEADS, DELTA CONNECTION

SH 1 of 1