37LYJ841

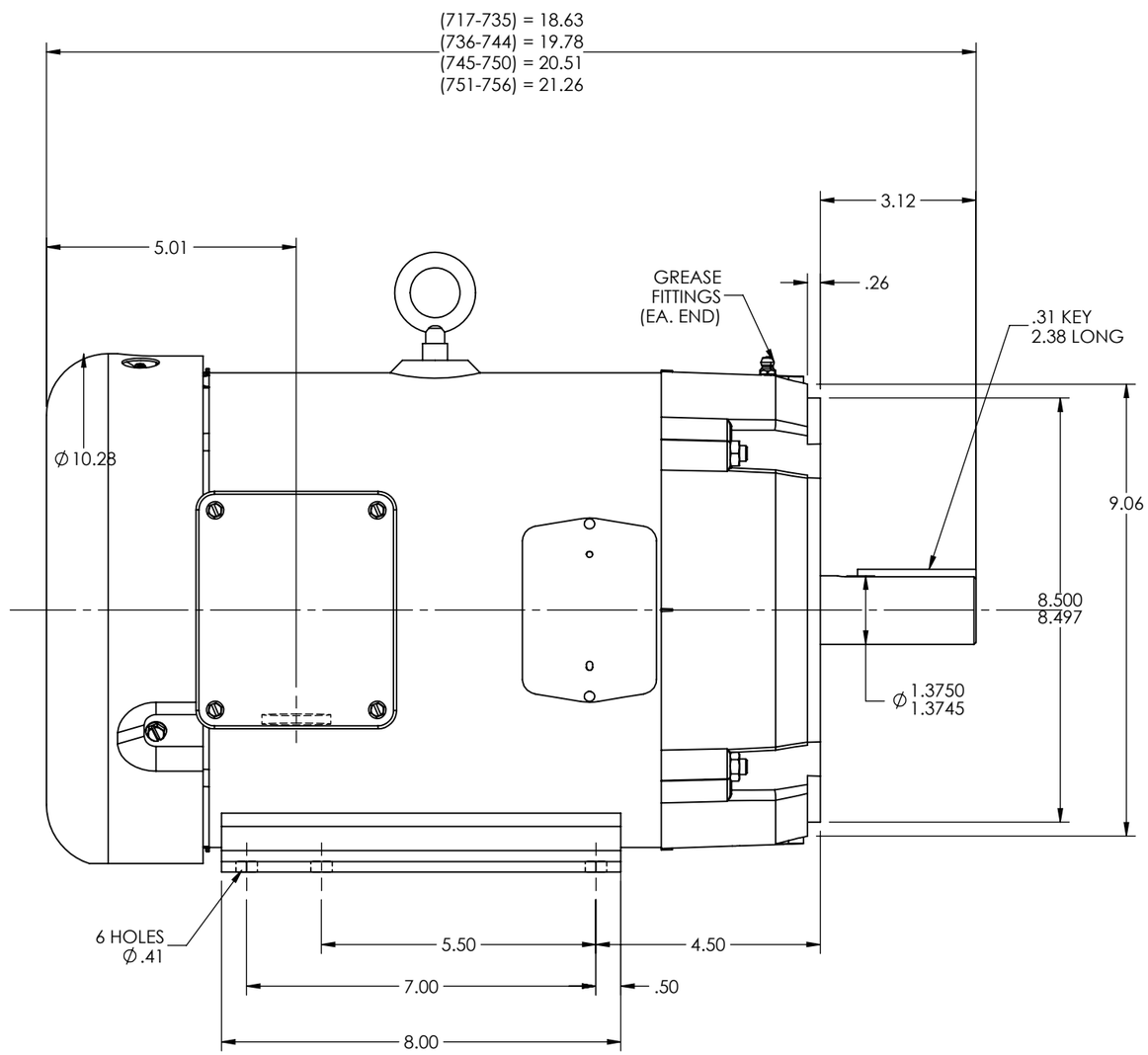

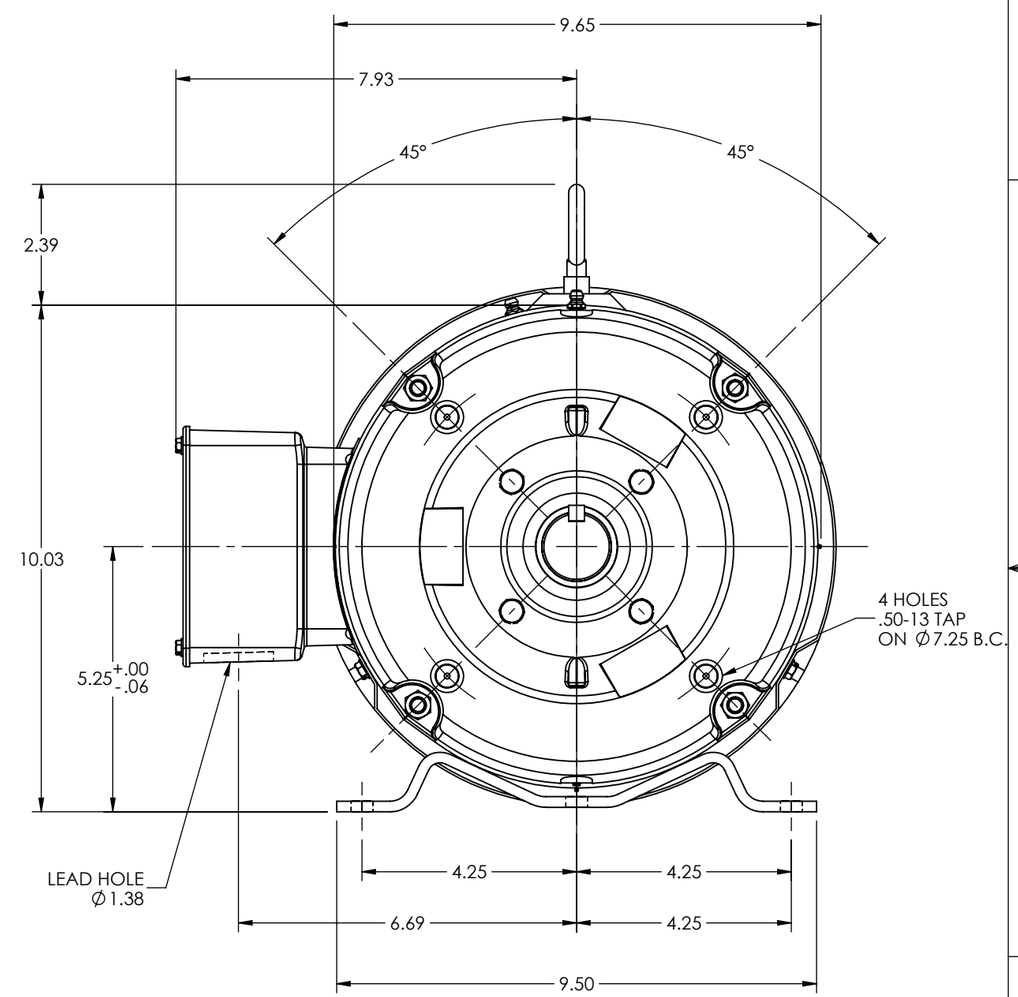

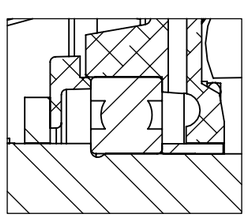

DRIVE END DETAIL

CUSTOMER IS RESPONSIBLE FOR DETERMINING THAT BALDOR'S PRODUCT WILL PERFORM SUITABLY IN THE INTENDED APPLICATION

REV. DESC: LOAD DRAWING TO SOLIDWORKS			
REV: B	VERSION: 02	REVISED: 06:45:40 07/13/2022	TDR: 000001192990
MODEL NO. 37LYJ841			REF: -
BY: ENALEM0			B

BALDOR

HORZ 213-5TC TEFC M AEGIS INTERNAL SHAFT GROUND

37LYJ841