ABB BALDOR RELIANCE

Customer information packet

CEM3584T

1.5HP, 1760RPM, 3PH, 60HZ, 145TC, 0524M, TEFC
Class - None
Division - Not Applicable

Copyright © All product information within this document is subject to ABB Motors and Mechanical Inc. copyright © protection, unless otherwise noted.
11/25/2026 10:21:59 PM

Specifications

Enclosure	TEFC
Frame	145TC
Frame Material	Iron
Frequency	60.00 Hz
Haz Area Class and Group	None
Haz Area Division	Not Applicable
Motor Letter Type	Three Phase
Output @ Frequency	1.500 HP @ 60 HZ
Phase	3
Synchronous Speed @ Frequency	1800 RPM @ 60 HZ
Voltage @ Frequency	230.0 V @ 60 HZ
	460.0 V @ 60 HZ
Agency Approvals	CURUSEEV
	NEMA PREMIUM
Ambient Temperature	40 °C
Auxiliary Box	NO AUXILLARY BOX
Auxiliary Box Lead Termination	None
Base Indicator	Rigid
Bearing Grease Type	Polyrex EM (-20F +300F)
Blower	None
Current @ Voltage	2.300 A @ 460.0 V
	4.600 A @ 230.0 V
	4.640 A @ 208.0 V
Design Code	B
Drip Cover	No Drip Cover
Duty Rating	CONT
Efficiency @ 100% Load	86.5 %
Electrically Isolated Bearing	Not Electrically Isolated
Feedback Device	NO FEEDBACK
Front Shaft Indicator	None
Heater Indicator	No Heater
High Voltage Full Load Amps	2.3 a

Part Detail

Revision	D
Type	AC
Mech. spec.	05C052
Base	
Status	PRD/A
Elec. spec.	05WGX510
Layout	05LYC052
Eff. date	04-29-2024
CD Diagram	CD0005
Poles	04
Leads	9#18
Proprietary	False
Created date	03-11-2022

Insulation Class	F
Inverter Code	Inverter Ready
KVA Code	M
Lifting Lugs	Standard Lifting Lugs
Locked Bearing Indicator	Locked Bearing
Motor Lead Quantity/Wire Size	9 @ 18 AWG
Motor Lead Termination	Flying Leads
Motor Standards	NEMA
Motor Type	0524M
Mounting Arrangement	F1
Number of Poles	4
Overall Length	13.03 IN
Power Factor	72
Product Family	General Purpose
Pulley End Bearing Type	Ball
Pulley Face Code	C-Face
Pulley Shaft Indicator	Standard
Rodent Screen	None
Service Factor	1.15
Shaft Diameter	0.875 IN
Shaft Ground Indicator	No Shaft Grounding
Shaft Rotation	Reversible
Shaft Slinger Indicator	No Slinger
Speed	1770 rpm
Speed Code	Single Speed
Starting Method	Direct on line
Thermal Device - Bearing	None
Thermal Device - Winding	None
Vibration Sensor Indicator	No Vibration Sensor
Winding Thermal 1	None
Winding Thermal 2	None

Nameplate

NP3441LUA											
CAT.NO.	CEM3584T										
SPEC	05C052X510G1										
HP	1.5										
VOLTS	230/460										
AMPS	4.34/2.17										
RPM	1760										
FRAME	145TC	**HZ**	60	**PH**	3						
SF	1.15	**CODE**	L	**DES**	B	**CLASS**	F				
NEMA NOM. EFF	86.5	**PF**	75								
RATING	40C AMB-CONT										
CC	010A										
ENCL	TEFC	**SER**									
DE	6205	**ODE**	6203								
VPWM INVERTER READY	SFA 4.8/2.4										
CT6-60H(10:1)VT3-60H(20:1											
	1.5HP 190/380V 50HZ 5.2/2.6A										SF1.0

AC Induction Motor Performance Data
Record # 95408
Typical performance - not guaranteed values

Winding: 05WGX510-R001	**Type:** 0524M	**Enclosure:** TEFC

Nameplate Data			
Rated Output (HP)			1.5
Volts			230/460
Full Load Amps			4.6/2.3
R.P.M.			1770
Hz	60	**Phase**	3
NEMA Design Code	B	**KVA Code**	M
Service Factor (S.F.)			1.15
NEMA Nom. Eff.	86.5	**Power Factor**	72
Rating - Duty			40C AMB-CONT
S.F. Amps			5/2.5

460 V, 60 Hz: High Voltage Connection	
Full Load Torque	4.48 LB-FT
Start Configuration	direct on line
Breakdown Torque	18.8 LB-FT
Pull-up Torque	9.6 LB-FT
Locked-rotor Torque	12.6 LB-FT
Starting Current	19.7 A
No-load Current	1.51 A
Line-line Res. @ 25ºC	11.8 Ω
Temp. Rise @ Rated Load	48°C
Temp. Rise @ S.F. Load	57°C
Locked-rotor Power Factor	58.4
Rotor inertia	0.173 lb-ft²

Load Characteristics 460 V, 60 Hz, 1.5 HP

% of Rated Load	**25**	**50**	**75**	**100**	**125**	**150**	**S.F.**
Power Factor	31	49	63	72	78	81	76
Efficiency	75.1	83.5	86	86.5	85.8	84.8	86.1
Speed	1792	1785	1777	1769	1760	1750	1764
Line amperes	1.56	1.72	1.97	2.28	2.65	3.06	2.5

ABB Motors and Mechanical Inc.

WINDING # 05WGX510

1.5 HP 3 PH 60 HZ 1770 RPM 460 V 0524M

Typical performance - not guaranteed values.

TORQUES(LB-FT): PO=18.8 PU=9.6 LR=12.6 LRA=19.7

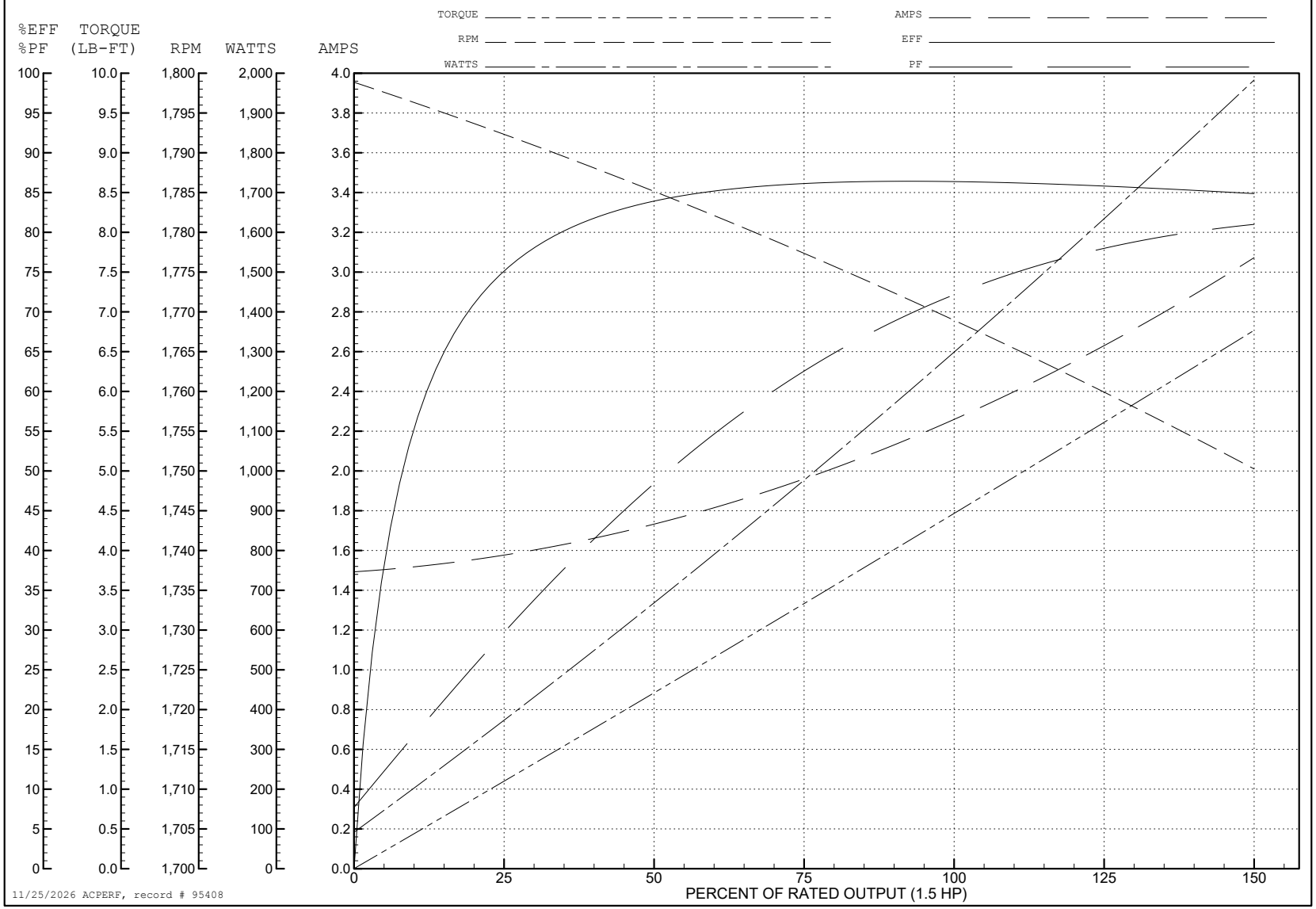

11/25/2026 ACPERF, record # 95408

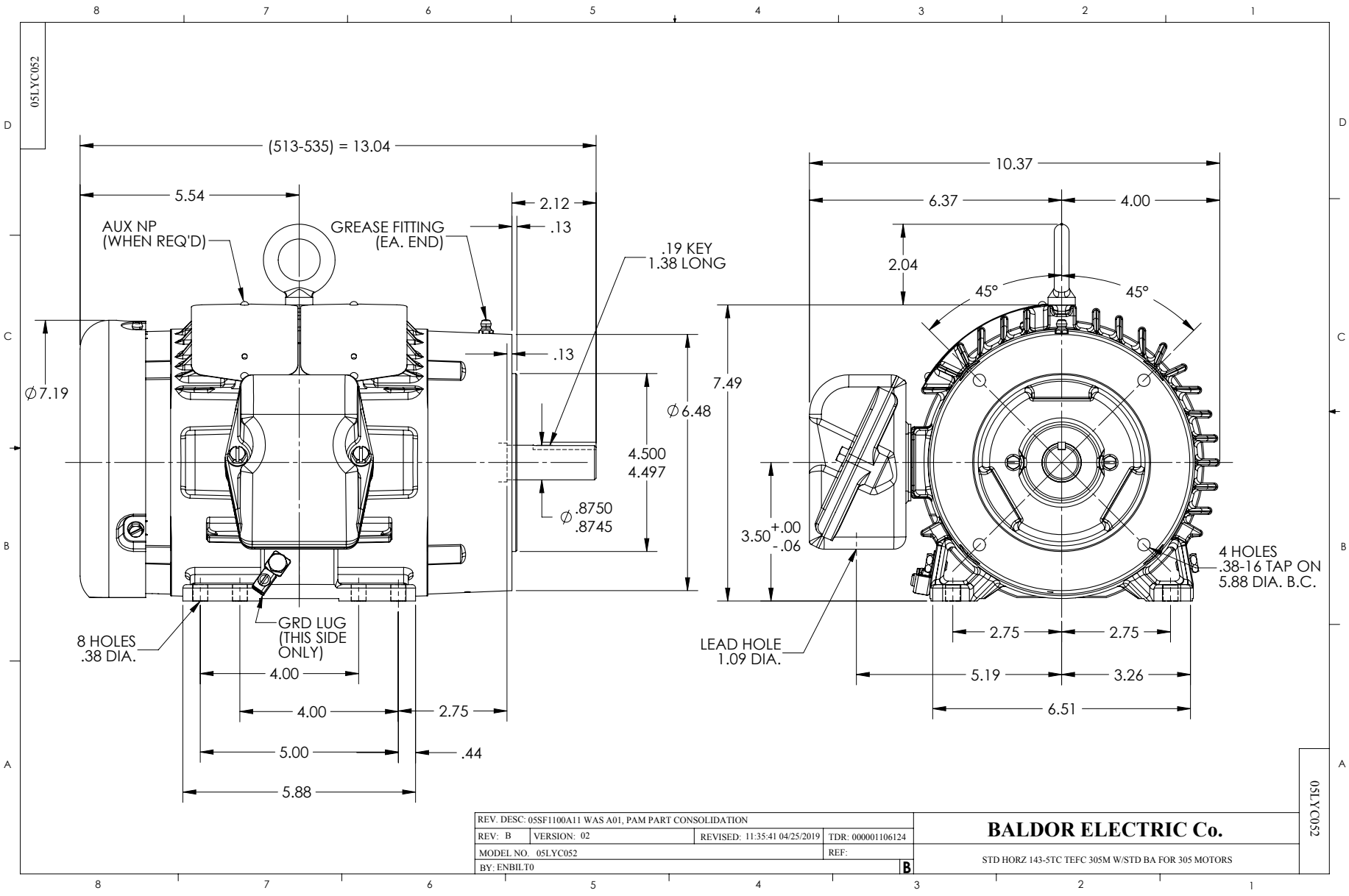
05LYC052
(513-535) = 13.04
5.54
2.12
.13
AUX NP
(WHEN REQ'D)
GREASE FITTING
(EA. END)
.19 KEY
1.38 LONG
∅7.19
.13
∅6.48
4.500
4.497
∅.8750
.8745
8 HOLES
.38 DIA.
GRD LUG
(THIS SIDE
ONLY)
4.00
4.00
2.75
5.00
.44
5.88
10.37
6.37
4.00
2.04
45°
45°
7.49
3.50 +.00 -.06
4 HOLES
.38-16 TAP ON
5.88 DIA. B.C.
LEAD HOLE
1.09 DIA.
2.75
2.75
5.19
3.26
6.51
REV. DESC: 05SF1100A11 WAS A01, PAM PART CONSOLIDATION
REV: B
VERSION: 02
REVISED: 11:35:41 04/25/2019
TDR: 000001106124
MODEL NO. 05LYC052
REF:
BY: ENBILT0
B
BALDOR ELECTRIC Co.
STD HORZ 143-5TC TEFC 305M W/STD BA FOR 305 MOTORS
05LYC052

CD0005

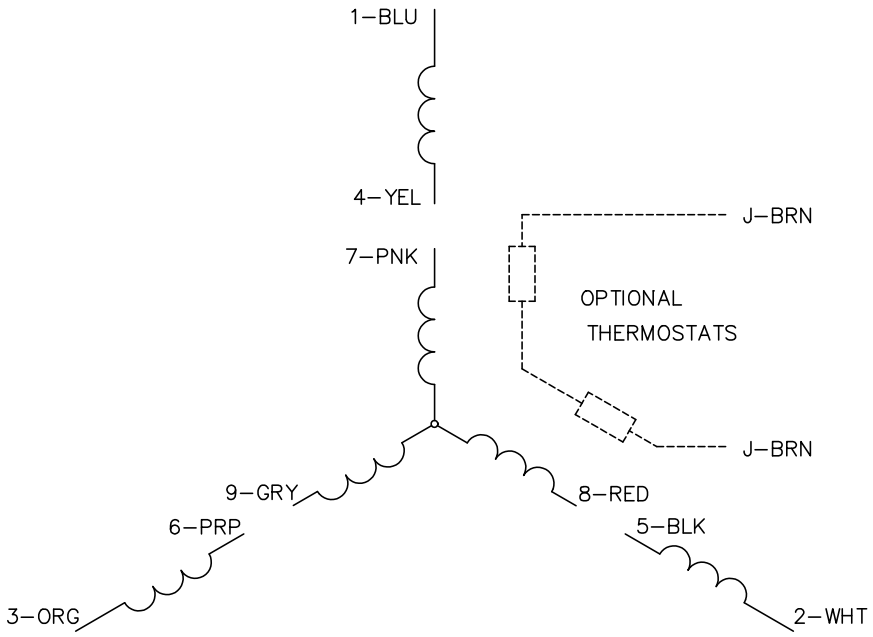

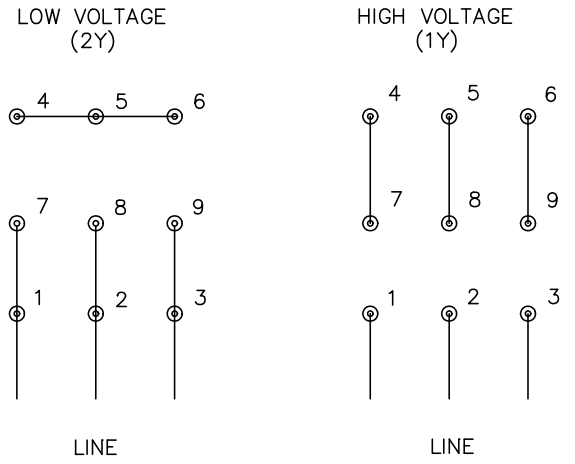

NOTES:

1. INTERCHANGE ANY TWO LINE LEADS TO REVERSE ROTATION.
2. OPTIONAL THERMOSTATS ARE PROVIDED WHEN SPECIFIED.
3. ACTUAL NUMBER OF INTERNAL PARALLEL CIRCUITS MAY BE A MULTIPLE OF THOSE SHOWN ABOVE.
4. LEAD COLORS ARE OPTIONAL. LEADS MUST ALWAYS BE NUMBERED AS SHOWN.

CD0005

REV. DESC: REVISE TO SHOW OPTIONAL COLORS			BALDOR ELECTRIC Co.
REV. LTR: E	BY: JLP	REVISED: 01/19/99 10:15	TDR: 0171435
CD0005		FILE: AAA00005140	MDL: –
		MTL: –	3PH, DV, 9 LEADS