ABB BALDOR RELIANCE

Customer information packet

CEM3581T

1HP, 1760RPM, 3PH, 60HZ, 143TC, 0520M, TEFC, F1
Class - None
Division - Not Applicable

Copyright © All product information within this document is subject to ABB Motors and Mechanical Inc. copyright © protection, unless otherwise noted.
11/25/2026 4:10:54 AM

Specifications

Enclosure	TEFC
Frame	143TC
Frame Material	Iron
Frequency	60.00 Hz
Haz Area Class and Group	None
Haz Area Division	Not Applicable
Motor Letter Type	Three Phase
Output @ Frequency	1.000 HP @ 60 HZ
Phase	3
Synchronous Speed @ Frequency	1800 RPM @ 60 HZ
Voltage @ Frequency	230.0 V @ 60 HZ
	460.0 V @ 60 HZ
Agency Approvals	CURUSEEV
	NEMA PREMIUM
Ambient Temperature	40 °C
Auxiliary Box	NO AUXILLARY BOX
Auxiliary Box Lead Termination	None
Base Indicator	Rigid
Bearing Grease Type	Polyrex EM (-20F +300F)
Blower	None
Current @ Voltage	1.630 A @ 460.0 V
	3.200 A @ 208.0 V
	3.260 A @ 230.0 V
Design Code	B
Drip Cover	No Drip Cover
Duty Rating	CONT
Efficiency @ 100% Load	85.5 %
Electrically Isolated Bearing	Not Electrically Isolated
Feedback Device	NO FEEDBACK
Front Shaft Indicator	None
Heater Indicator	No Heater
High Voltage Full Load Amps	1.6 a

Part Detail

Revision	E
Type	AC
Mech. spec.	05C052
Base	
Status	PRD/A
Elec. spec.	05WGX508
Layout	05LYC052
Eff. date	04-29-2024
CD Diagram	CD0005
Poles	04
Leads	9#18
Proprietary	False
Created date	09-29-2021

Insulation Class	F
Inverter Code	Inverter Ready
KVA Code	N
Lifting Lugs	Standard Lifting Lugs
Locked Bearing Indicator	Locked Bearing
Motor Lead Quantity/Wire Size	9 @ 18 AWG
Motor Lead Termination	Flying Leads
Motor Standards	NEMA
Motor Type	0520M
Mounting Arrangement	F1
Number of Poles	4
Overall Length	13.04 IN
Power Factor	67
Product Family	General Purpose
Pulley End Bearing Type	Ball
Pulley Face Code	C-Face
Pulley Shaft Indicator	Standard
Rodent Screen	None
Service Factor	1.15
Shaft Diameter	0.875 IN
Shaft Ground Indicator	No Shaft Grounding
Shaft Rotation	Reversible
Shaft Slinger Indicator	No Slinger
Speed	1760 rpm
Speed Code	Single Speed
Starting Method	Direct on line
Thermal Device - Bearing	None
Thermal Device - Winding	None
Vibration Sensor Indicator	No Vibration Sensor
Winding Thermal 1	None
Winding Thermal 2	None

Nameplate

NP3441LUA										
CAT.NO.	CEM3581T									
SPEC	05C052X508G1									
HP	1									
VOLTS	230/460									
AMPS	3.26/1.63									
RPM	1760									
FRAME	143TC	**HZ**	60	**PH**	3					
SF	1.15	**CODE**	N	**DES**	B	**CLASS**	F			
NEMA NOM. EFF	85.5	**PF**	67							
RATING	40C AMB-CONT									
CC	010A									
ENCL	TEFC	**SER**								
DE	6205	**ODE**	6203							
VPWM INVERTER READY	SFA 3.52/1.76									
CT6-60H(10:1)VT3-60H(20:1										
	50HZ 1HP 190/380V 3.6/1.8A									SF1.0

AC Induction Motor Performance Data
Record # 82131
Typical performance - not guaranteed values

Winding: 05WGX508-R001	**Type:** 0520M	**Enclosure:** TEFC

Nameplate Data				**460 V, 60 Hz: High Voltage Connection**	
Rated Output (HP)			1	**Full Load Torque**	2.979 LB-FT
Volts			230/460	**Start Configuration**	direct on line
Full Load Amps			3.2-3.2/1.6	**Breakdown Torque**	13.9 LB-FT
R.P.M.			1760	**Pull-up Torque**	8 LB-FT
Hz	60	**Phase**	3	**Locked-rotor Torque**	9.18 LB-FT
NEMA Design Code	B	**KVA Code**	N	**Starting Current**	14.4 A
Service Factor (S.F.)			1.15	**No-load Current**	1.11 A
NEMA Nom. Eff.	0	**Power Factor**	0	**Line-line Res. @ 25ºC**	16.215 Ω
Rating - Duty			40C AMB-CONT	**Temp. Rise @ Rated Load**	24°C
S.F. Amps				**Temp. Rise @ S.F. Load**	28°C
				Locked-rotor Power Factor	62

Load Characteristics 460 V, 60 Hz, 1 HP

% of Rated Load	**25**	**50**	**75**	**100**	**125**	**150**	**S.F.**
Power Factor	29	46	59	68	74	79	72
Efficiency	71.2	81.4	84.6	85.5	85.4	84.7	85.4
Speed	1791.4	1784.2	1776.7	1768.6	1760	1750.7	1763
Line amperes	1.14	1.25	1.41	1.61	1.84	2.11	1.75

ABB Motors and Mechanical Inc.

WINDING # 05WGX508

1 HP 3 PH 60 HZ 1760 RPM 460 V 0520M

Typical performance - not guaranteed values.

TORQUES(LB-FT): PO=13.9 PU=8 LR=9.18 LRA=14.4

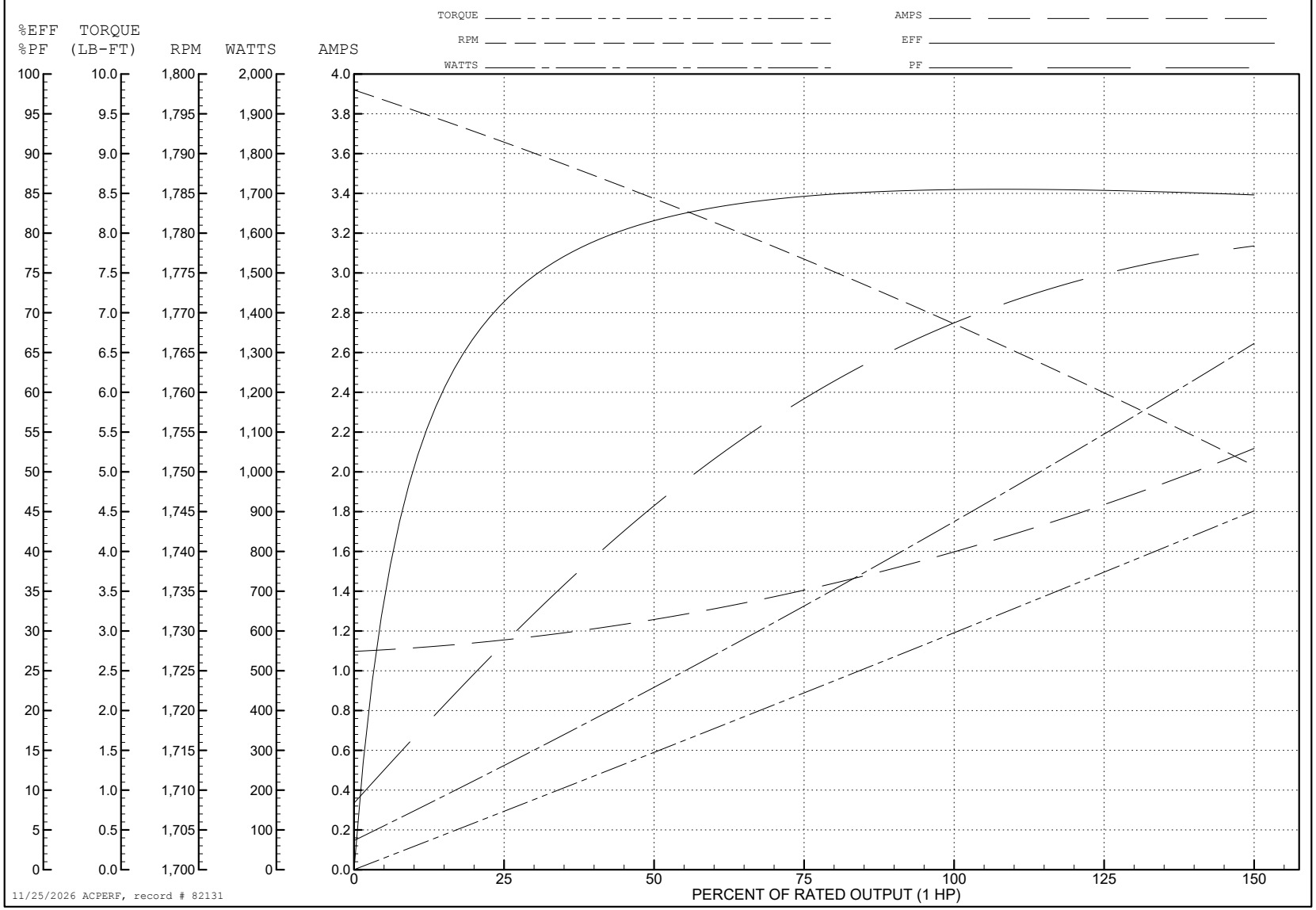

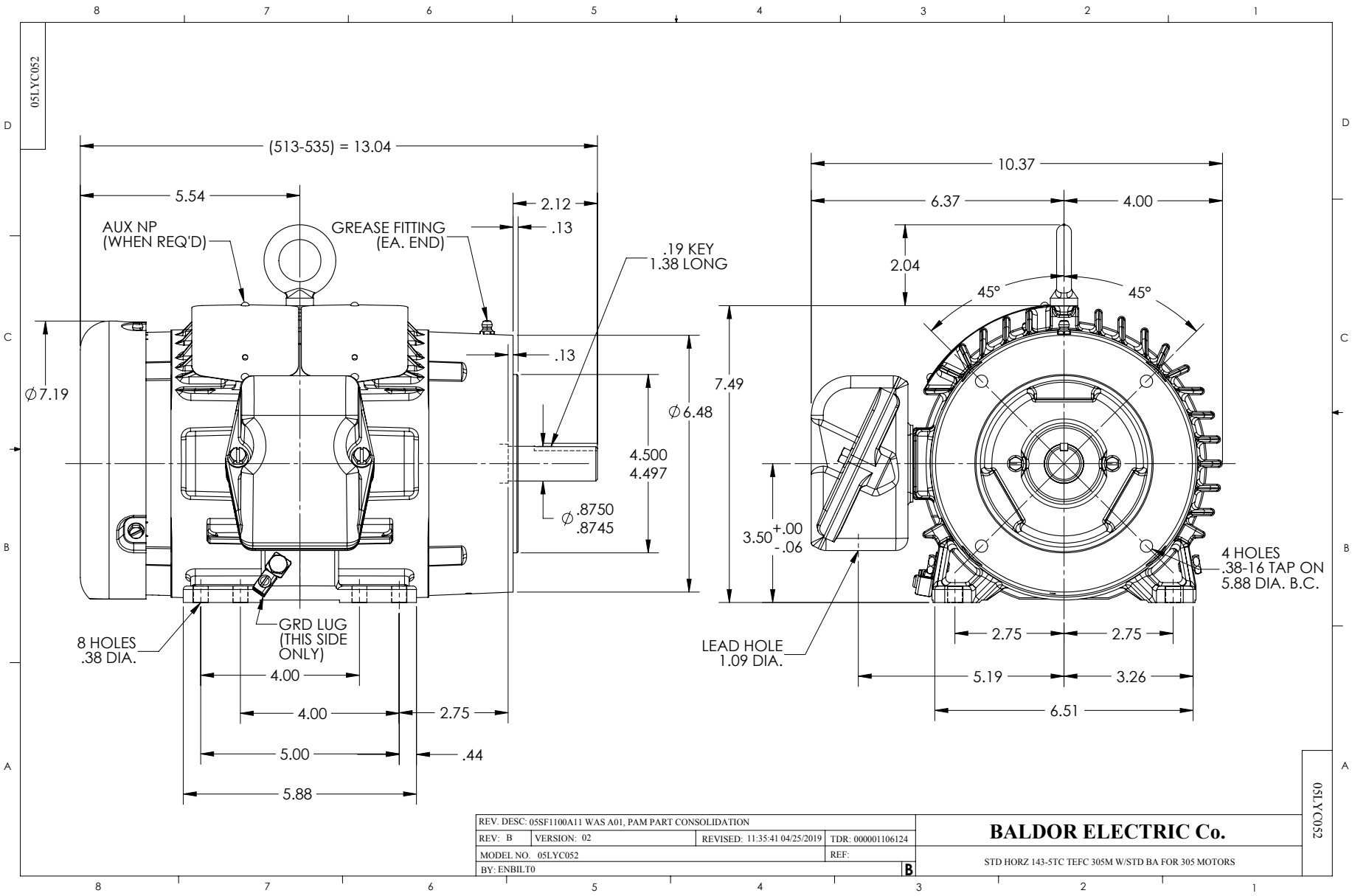
05LYC052
(513-535) = 13.04
5.54
2.12
.13
AUX NP
(WHEN REQ'D)
GREASE FITTING
(EA. END)
.19 KEY
1.38 LONG
∅7.19
.13
∅6.48
4.500
4.497
∅.8750
.8745
8 HOLES
.38 DIA.
GRD LUG
(THIS SIDE
ONLY)
4.00
4.00
2.75
5.00
.44
5.88
10.37
6.37
4.00
2.04
45°
45°
7.49
3.50 +.00 -.06
4 HOLES
.38-16 TAP ON
5.88 DIA. B.C.
LEAD HOLE
1.09 DIA.
2.75
2.75
5.19
3.26
6.51
REV. DESC: 05SF1100A11 WAS A01, PAM PART CONSOLIDATION
REV: B
VERSION: 02
REVISED: 11:35:41 04/25/2019
TDR: 000001106124
MODEL NO. 05LYC052
REF:
BY: ENBILT0
B
BALDOR ELECTRIC Co.
STD HORZ 143-5TC TEFC 305M W/STD BA FOR 305 MOTORS
05LYC052

CD0005

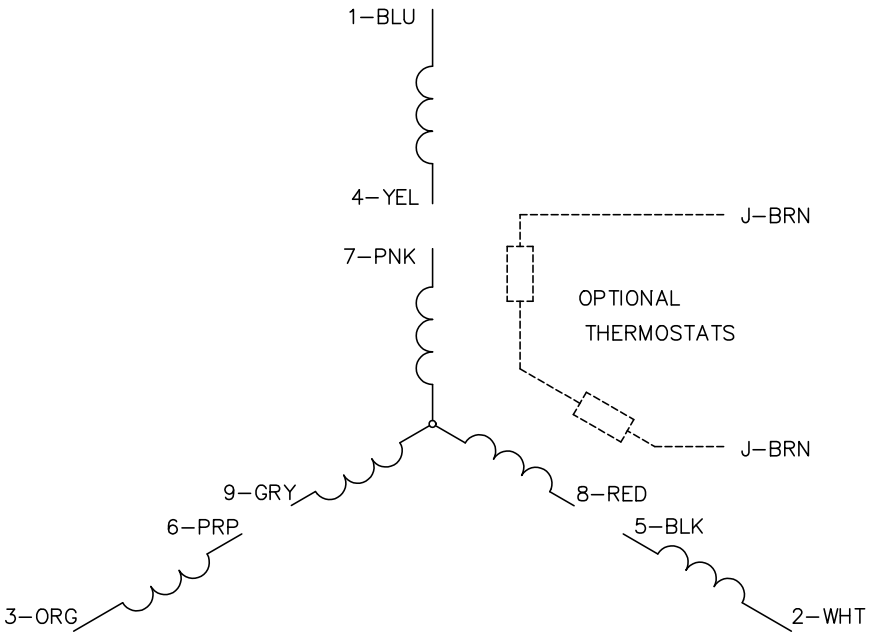

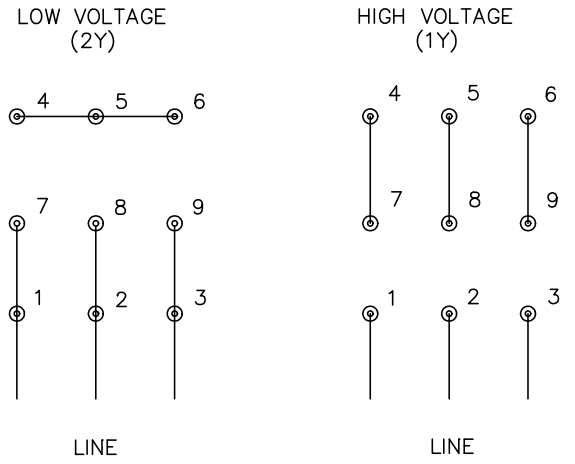

NOTES:

1. INTERCHANGE ANY TWO LINE LEADS TO REVERSE ROTATION.
2. OPTIONAL THERMOSTATS ARE PROVIDED WHEN SPECIFIED.
3. ACTUAL NUMBER OF INTERNAL PARALLEL CIRCUITS MAY BE A MULTIPLE OF THOSE SHOWN ABOVE.
4. LEAD COLORS ARE OPTIONAL. LEADS MUST ALWAYS BE NUMBERED AS SHOWN.

CD0005

REV. DESC: REVISE TO SHOW OPTIONAL COLORS			BALDOR ELECTRIC Co.
REV. LTR: E	BY: JLP	REVISED: 01/19/99 10:15	TDR: 0171435
CD0005		FILE: AAA00005140	MDL: –
		MTL: –	3PH, DV, 9 LEADS