36LY-000-161

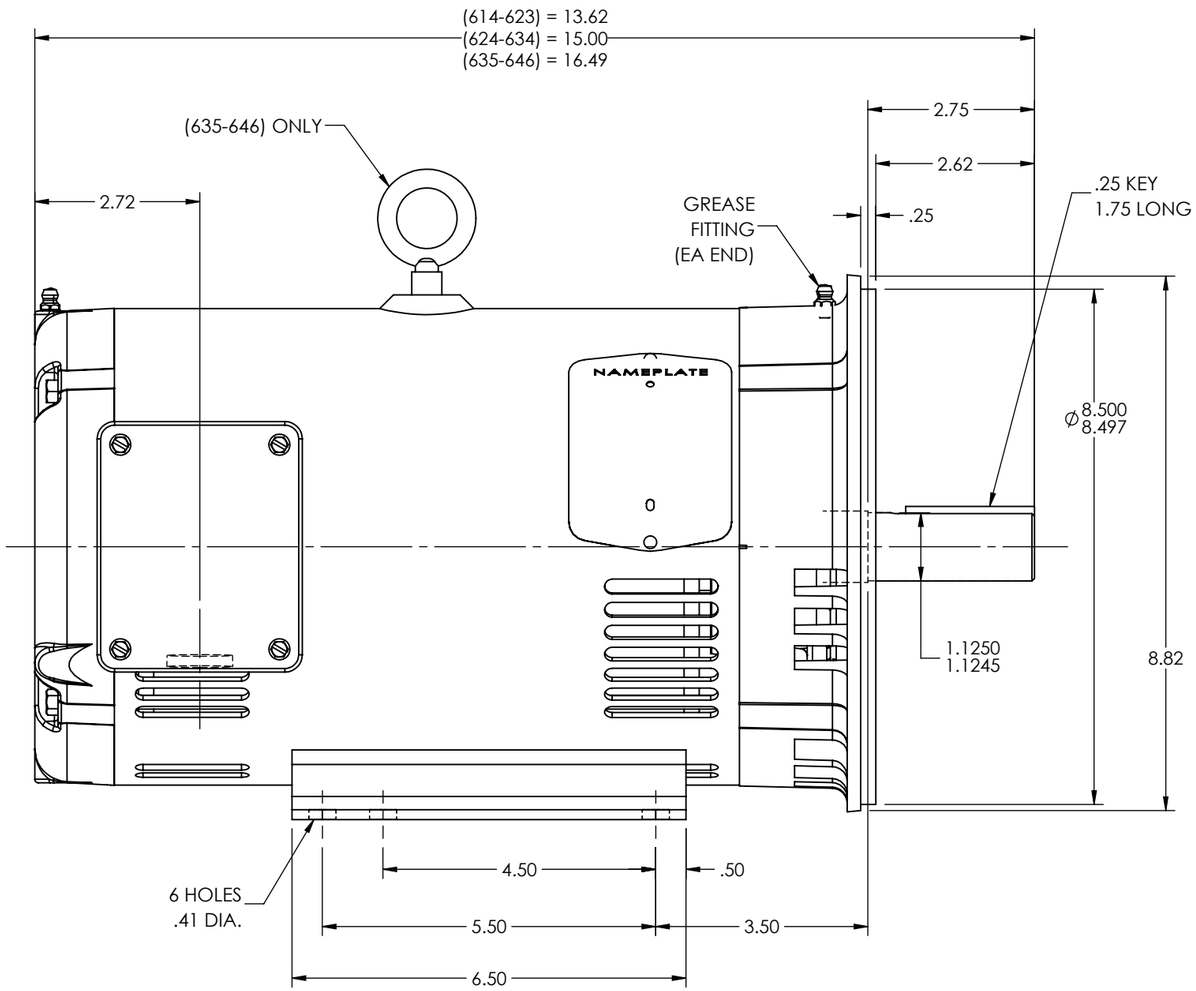

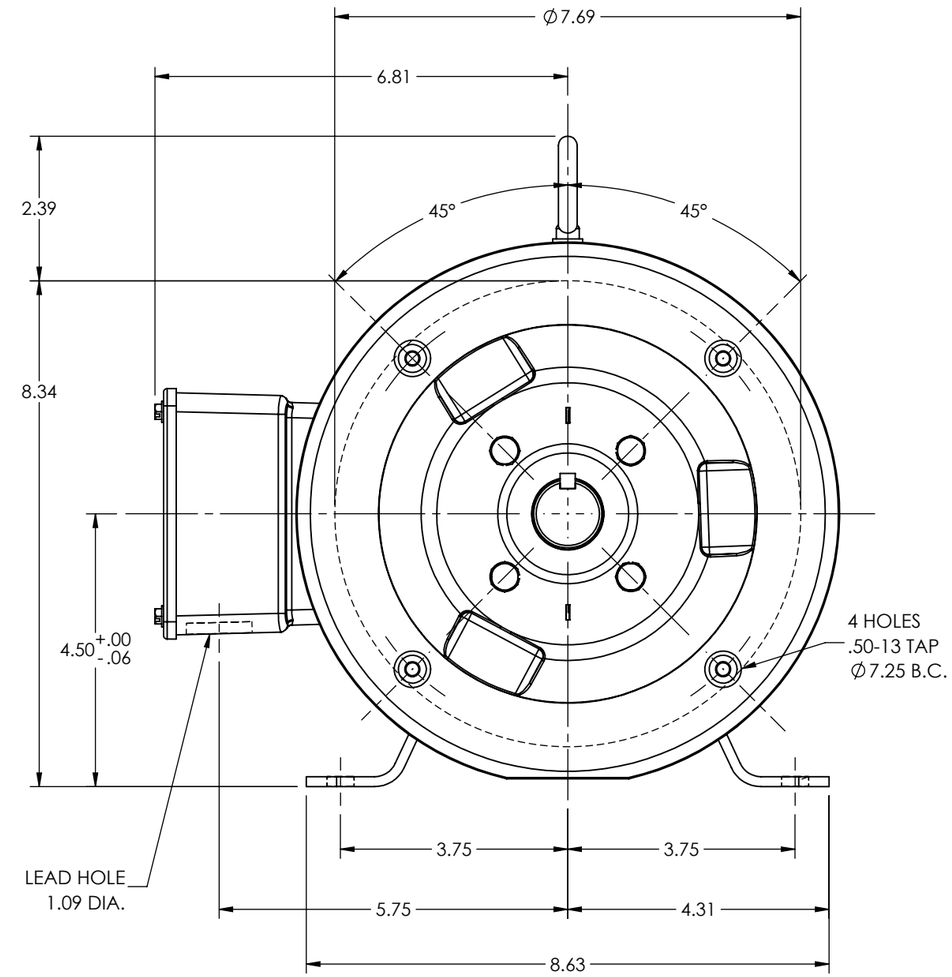

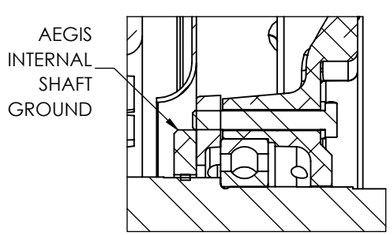

DRIVE END DETAIL

CUSTOMER IS RESPONSIBLE FOR DETERMINING THAT THE PRODUCT WILL PERFORM SUITABLY IN THE INTENDED APPLICATION

REV. DESC: UPDATE DE ENDPLATE TO 36EP3403A03			
REV: A	VERSION: 01	REVISED: 11:22:36 05/09/2024	TDR: 000001231935
MODEL NO. 36LY-000-161			REF: -
BY: USALMAZ			B

BALDOR - RELIANCE®

HOR 182-4TC OPSB 36M, AEGIS INT SH GRD (PU)

36LY-000-161