34LYF010

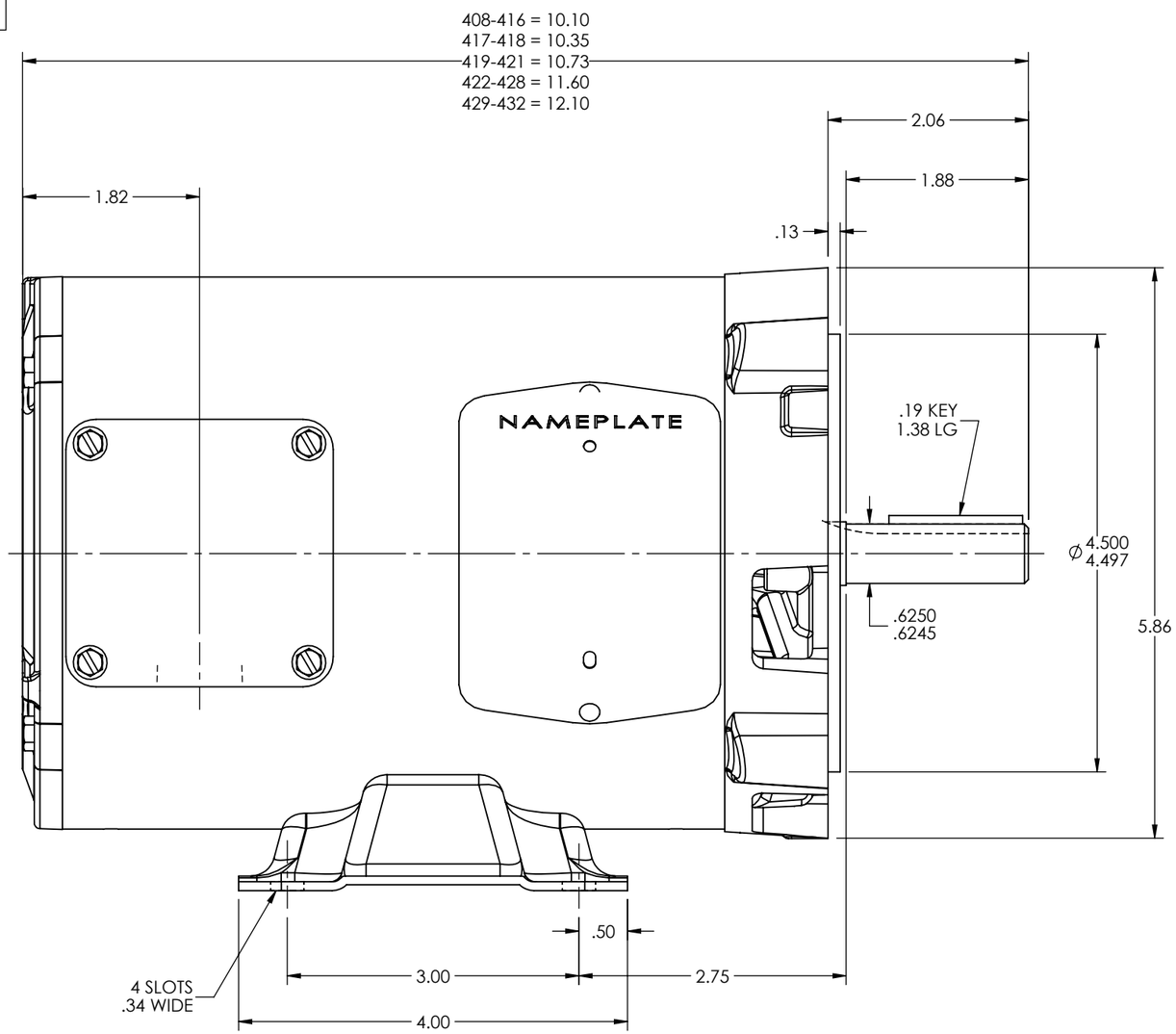

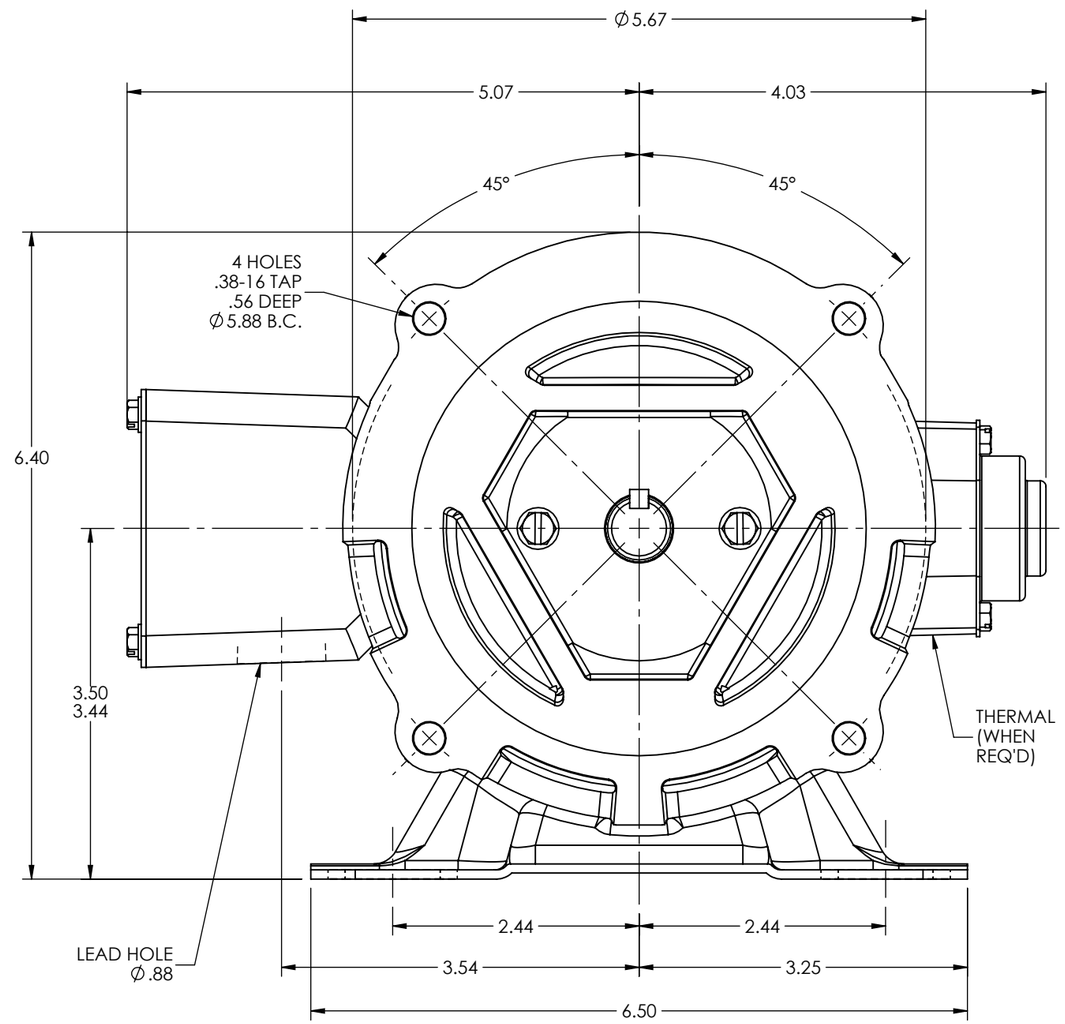

CUSTOMER IS RESPONSIBLE FOR DETERMINING THAT BALDOR'S PRODUCT WILL PERFORM SUITABLY IN THE INTENDED APPLICATION

REV. DESC: CLEAN UP DIMENSIONING			
REV: P	VERSION: 04	REVISED: 02:18:59 04/15/2025	TDR: 000001254324
MODEL NO. 34LYF010			REF: -
BY: ENJEFD0			B

BALDOR

STD HORZ 34M NEMA 56C OPEN

34LYF010