40LY-000-045

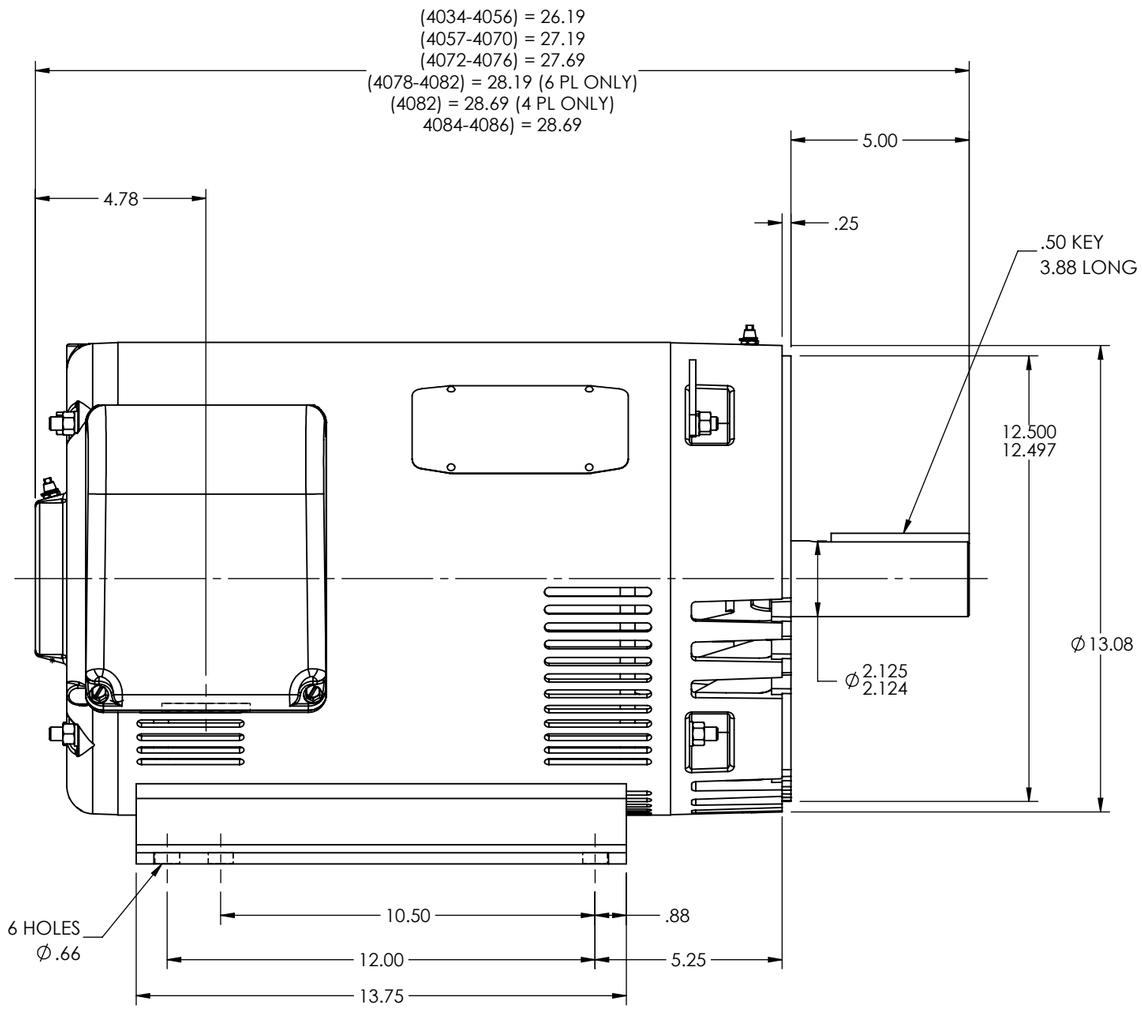

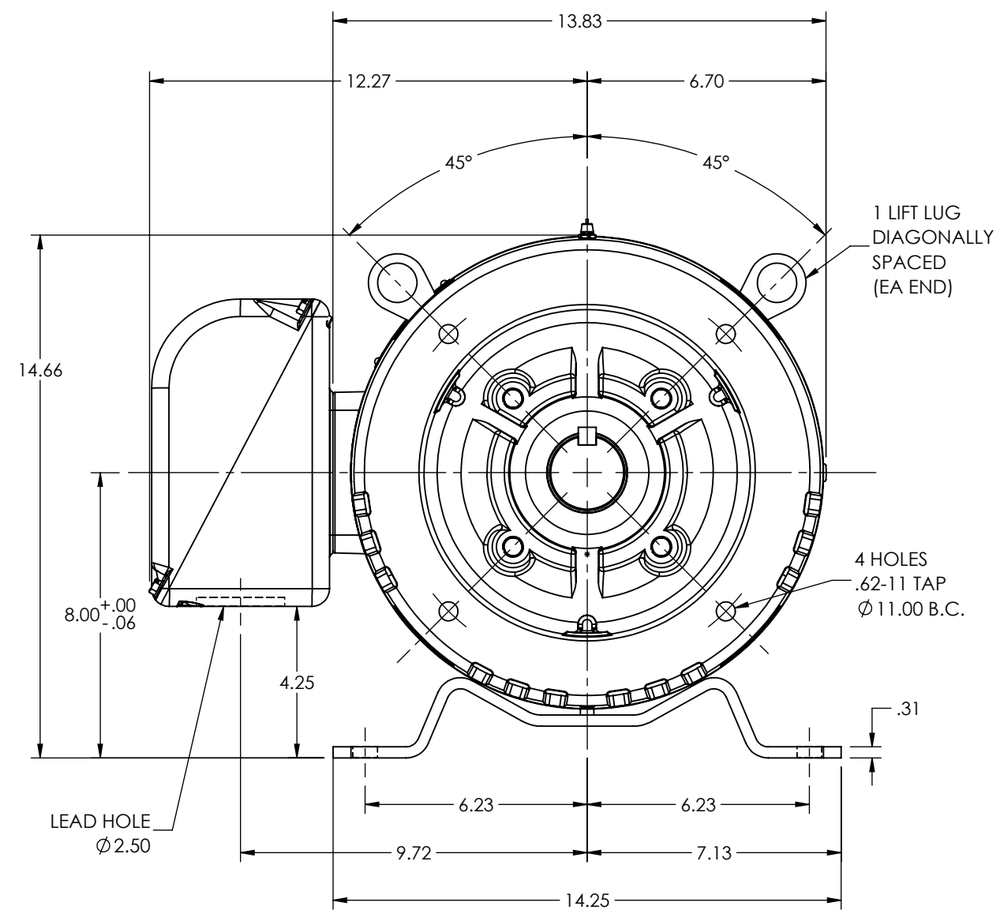

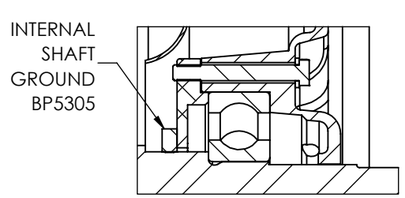

DRIVE END DETAIL

CUSTOMER IS RESPONSIBLE FOR DETERMINING THAT THE PRODUCT WILL PERFORM SUITABLY IN THE INTENDED APPLICATION

REV. DESC: CONVERT AUTOCAD TO SWD DRAWING			
REV: A	VERSION: 01	REVISED: 12:33:22 05/09/2024	TDR: 000001231935
MODEL NO. 40LY-000-045			REF: -
BY: USALMAZ			B

BALDOR - RELIANCE®

HORZ OPSB 324-6TC W/AEGIS INT SHAFT GND

40LY-000-045