39LYD102

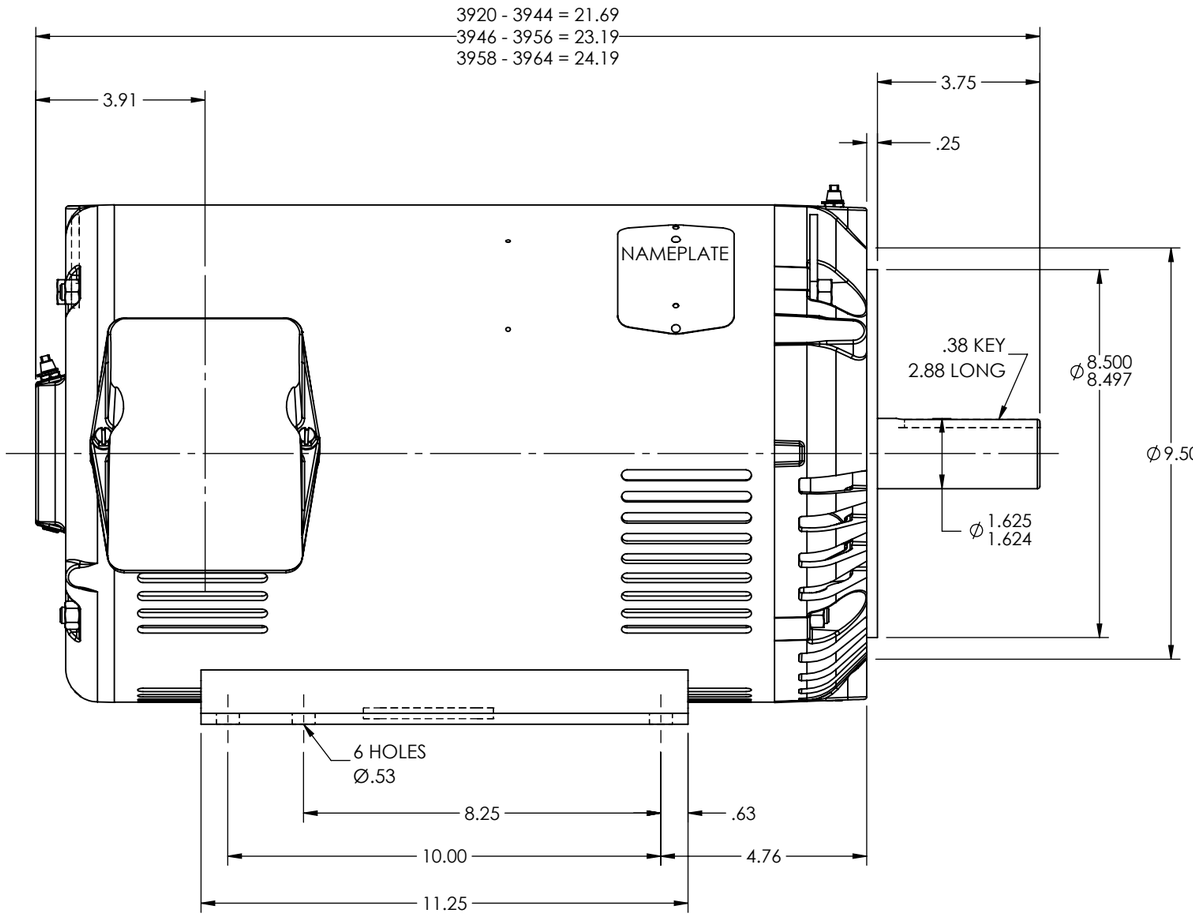

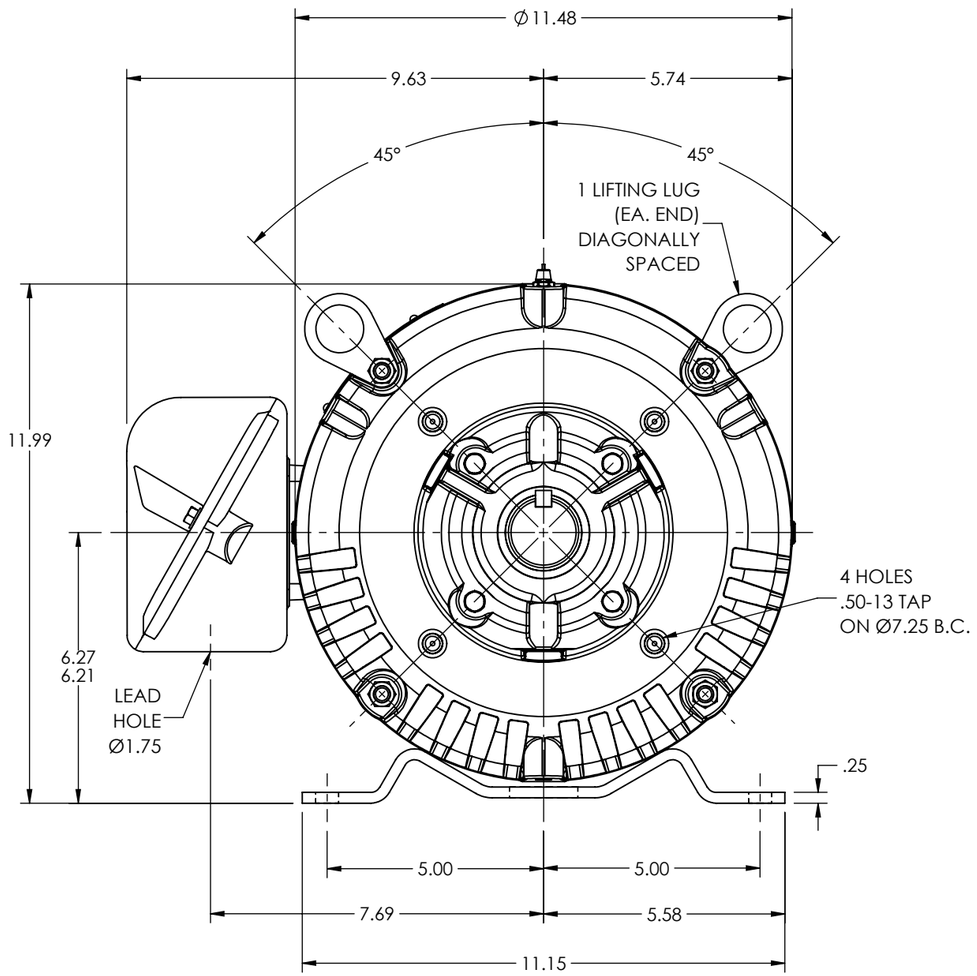

CUSTOMER IS RESPONSIBLE FOR DETERMINING THAT THE PRODUCT WILL PERFORM SUITABLY IN THE INTENDED APPLICATION

REV. DESC: CHANGE SHAFT FROM 39SH2605 TO 39SH2A35			
REV: N	VERSION: 09	REVISED: 02:18:27 12/08/2025	TDR: 000001268312
MODEL NO. 39LYD102			REF: -
BY: USJOCUR5			B

BALDOR - RELIANCE®

HORZ OPSB 254-6TC

39LYD102