Customer information packet

CEL11304

.5HP, 1725RPM, 1PH, 60HZ, 56C, 3424LC, OPEN, F1
Class - None
Division - Not Applicable

Copyright © All product information within this document is subject to ABB Motors and Mechanical Inc. copyright © protection, unless otherwise noted.
11/23/2026 8:14:00 PM

Specifications

Enclosure	OPEN
Frame	56C
Frame Material	Steel
Frequency	60.00 Hz
Haz Area Class and Group	None
Haz Area Division	Not Applicable
Motor Letter Type	Cap Start, Cap Run
Output @ Frequency	.500 HP @ 60 HZ
Phase	1
Synchronous Speed @ Frequency	1800 RPM @ 60 HZ
Voltage @ Frequency	115.0 V @ 60 HZ
	230.0 V @ 60 HZ
Agency Approvals	CURUSEEV
Ambient Temperature	40 °C
Auxiliary Box	NO AUXILLARY BOX
Auxiliary Box Lead Termination	None
Base Indicator	Rigid
Bearing Grease Type	Polyrex EM (-20F +300F)
Blower	None
Current @ Voltage	2.350 A @ 230.0 V
	3.200 A @ 208.0 V
	4.700 A @ 115.0 V
Design Code	N
Drip Cover	No Drip Cover
Duty Rating	CONT
Efficiency @ 100% Load	76.2 %
Electrically Isolated Bearing	Not Electrically Isolated
Feedback Device	NO FEEDBACK
Front Face Code	Standard
Front Shaft Indicator	None
Heater Indicator	No Heater
High Voltage Full Load Amps	2.4 a

Part Detail

Revision	G
Type	AC
Mech. spec.	34F867
Base	
Status	PRD/A
Elec. spec.	34WGR141
Layout	34LYF867
Eff. date	10-29-2024
CD Diagram	CD0055
Poles	04
Leads	6#18
Proprietary	False
Created date	10-03-2014

Insulation Class	B
Inverter Code	Not Inverter
KVA Code	K
Lifting Lugs	No Lifting Lugs
Locked Bearing Indicator	Locked Bearing
Motor Lead Exit	Ko Box
Motor Lead Quantity/Wire Size	6 @ 18 AWG
Motor Lead Termination	Flying Leads
Motor Standards	NEMA
Motor Type	3424LC
Mounting Arrangement	F1
Number of Poles	4
Overall Length	11.62 IN
Power Factor	98
Product Family	General Purpose
Pulley End Bearing Type	Ball
Pulley Face Code	C-Face
Pulley Shaft Indicator	Standard
Rodent Screen	None
RoHS Status	ROHS COMPLIANT
Service Factor	1.25
Shaft Diameter	0.625 IN
Shaft Extension Location	Pulley End
Shaft Ground Indicator	No Shaft Grounding
Shaft Rotation	Reversible
Shaft Slinger Indicator	No Slinger
Speed	1725 rpm
Speed Code	Single Speed
Starting Method	Direct on line
Thermal Device - Bearing	None
Thermal Device - Winding	None
Vibration Sensor Indicator	No Vibration Sensor
Winding Thermal 1	None
Winding Thermal 2	None

Nameplate

NP3155L											
CAT.NO.	CEL11304										
SPEC.	34F867R141G1										
HP	.5										
VOLTS	115/230										
AMP	4.7/2.35										
RPM	1725										
FRAME	56C		**HZ**	60			**PH**	1			
SER.F.	1.25	**CODE**	K	**DES**	N	**CL**	B				
F.L. AVG. EFF.	76.2	**PF**	98								
RATING	40C AMB-CONT										
CC											
DE	6203		**ODE**	6203							
ENCL	OPEN	**SN**									
	SFA 5.9/2.95										

AC Induction Motor Performance Data
Record # 47421
Typical performance - not guaranteed values

Winding: 34WGR141-R002	**Type:** 3424LC	**Enclosure:** OPEN

Nameplate Data				**115 V, 60 Hz: Low Voltage Connection**	
Rated Output (HP)			.5	**Full Load Torque**	1.51 LB-FT
Volts			115/230	**Start Configuration**	direct on line
Full Load Amps			4.7/2.35	**Breakdown Torque**	4.01 LB-FT
R.P.M.			1725	**Pull-up Torque**	3.75 LB-FT
Hz	60	**Phase**	1	**Locked-rotor Torque**	6.42 LB-FT
NEMA Design Code	N	**KVA Code**	K	**Starting Current**	31.9 A
Service Factor (S.F.)			1.25	**No-load Current**	1.06 A
NEMA Nom. Eff.	76.2	**Power Factor**	98	**Line-line Res. @ 25ºC**	1.6786 Ω A Ph 2.0496 Ω B Ph
Rating - Duty			40C AMB-CONT	**Temp. Rise @ Rated Load**	37°C
S.F. Amps			5.9/2.95	**Temp. Rise @ S.F. Load**	55°C

Load Characteristics 115 V, 60 Hz, 0.5 HP

% of Rated Load	**25**	**50**	**75**	**100**	**125**	**150**	**S.F.**
Power Factor	89	94	95	95	95	94	95
Efficiency	59.9	73	76.8	76.6	73.3	67.1	73.3
Speed	1782.8	1767.7	1748.6	1726.8	1694.2	1648.1	1694
Line amperes	1.56	2.34	3.34	4.39	5.8	7.69	5.8

ABB Motors and Mechanical Inc.

WINDING # 34WGR141

0.5 HP 1 PH 60 HZ 1725 RPM 115 V 3424LC

Typical performance - not guaranteed values.

TORQUES(LB-FT): PO=4.01 PU=3.75 LR=6.42 LRA=31.9

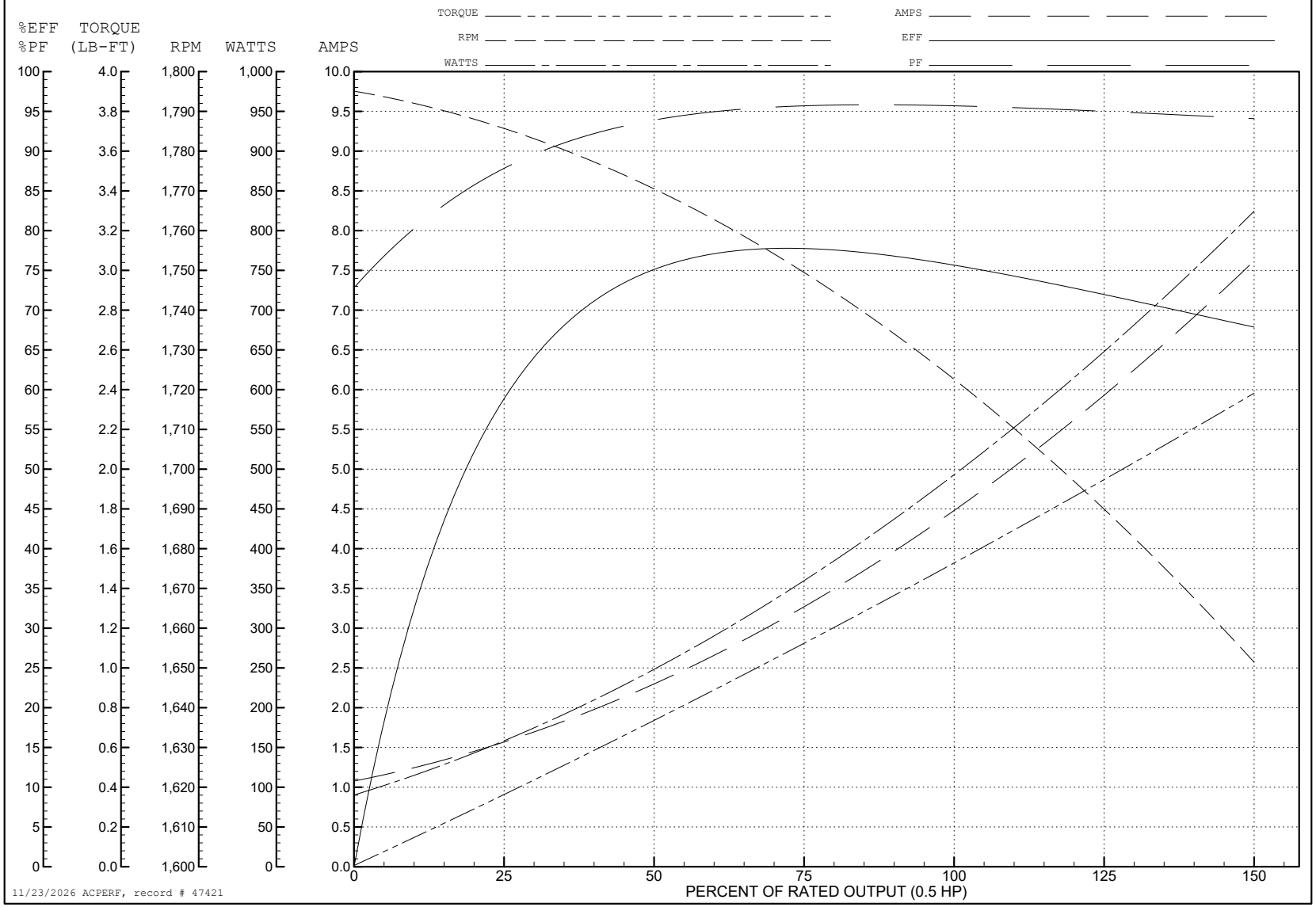

AC Induction Motor Performance Data
Record # 49328
Typical performance - not guaranteed values

Winding: 34WGR141-R002	**Type:** 3424LC	**Enclosure:** OPEN

Nameplate Data				**230 V, 60 Hz: High Voltage Connection**	
Rated Output (HP)			.5	**Full Load Torque**	1.51 LB-FT
Volts			115/230	**Start Configuration**	direct on line
Full Load Amps			4.7/2.35	**Breakdown Torque**	4.01 LB-FT
R.P.M.			1725	**Pull-up Torque**	2.84 LB-FT
Hz	60	**Phase**	1	**Locked-rotor Torque**	4.87 LB-FT
NEMA Design Code	N	**KVA Code**	K	**Starting Current**	14.97 A
Service Factor (S.F.)			1.25	**No-load Current**	0.571 A
NEMA Nom. Eff.	76.2	**Power Factor**	98	**Line-line Res. @ 25ºC**	6.38 Ω A Ph 2.09 Ω B Ph
Rating - Duty			40C AMB-CONT	**Temp. Rise @ Rated Load**	40°C
S.F. Amps			5.9/2.95	**Temp. Rise @ S.F. Load**	53°C
				Rotor inertia	0.057 LB-FT2

Load Characteristics 230 V, 60 Hz, 0.5 HP

% of Rated Load	**25**	**50**	**75**	**100**	**125**	**150**	**S.F.**
Power Factor	89	93	95	96	95	94	95
Efficiency	57.8	71.3	75.5	75.6	72.6	66.9	72.6
Speed	1783	1768	1749	1727	1694	1648	1694
Line amperes	0.809	1.2	1.7	2.22	2.93	3.87	2.93

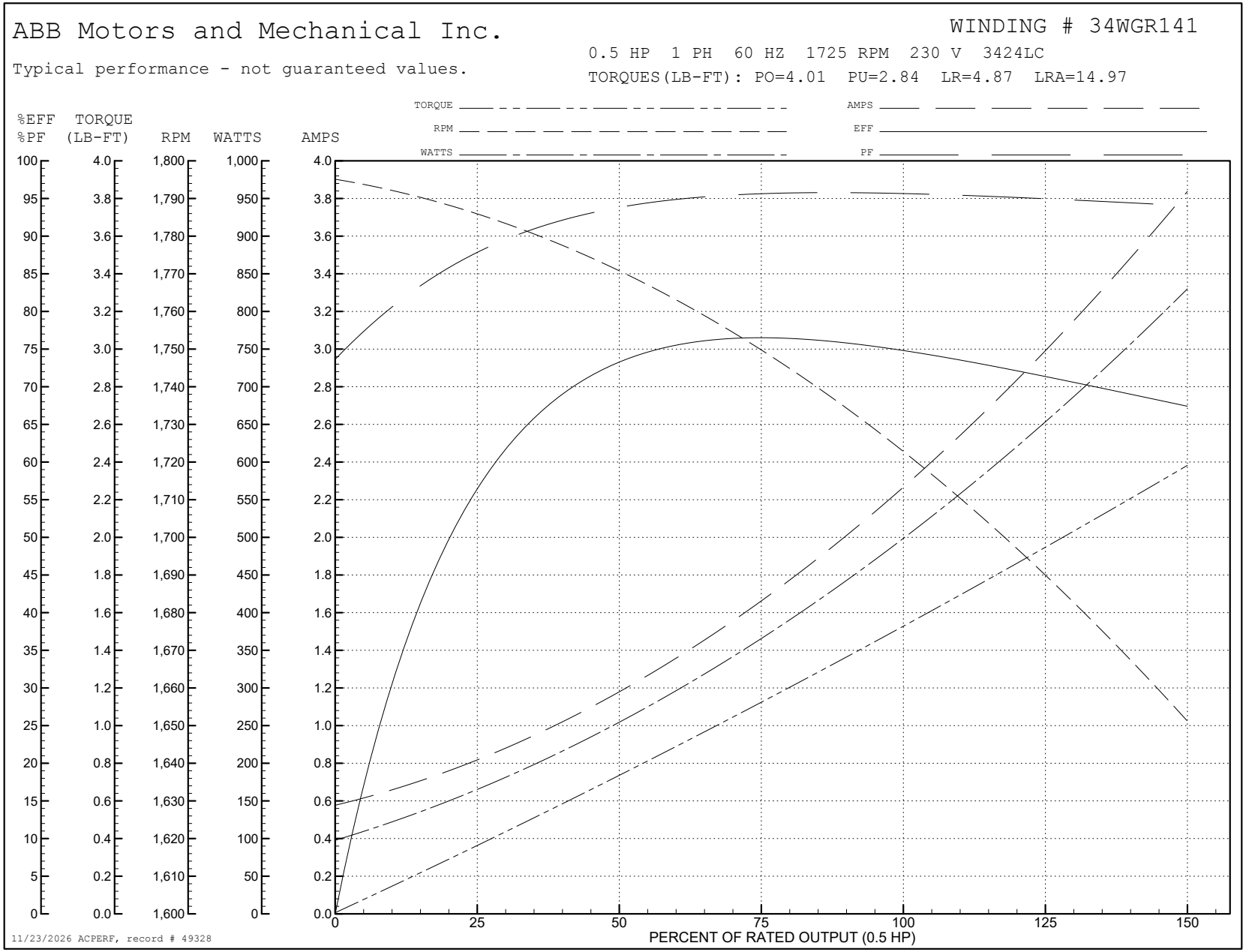
ABB Motors and Mechanical Inc.
WINDING # 34WGR141
0.5 HP 1 PH 60 HZ 1725 RPM 230 V 3424LC
Typical performance - not guaranteed values.
TORQUES(LB-FT): PO=4.01 PU=2.84 LR=4.87 LRA=14.97
TORQUE
RPM
WATTS
AMPS
EFF
PF
%EFF %PF
TORQUE (LB-FT)
RPM
WATTS
AMPS
PERCENT OF RATED OUTPUT (0.5 HP)
11/23/2026 ACPERF, record # 49328

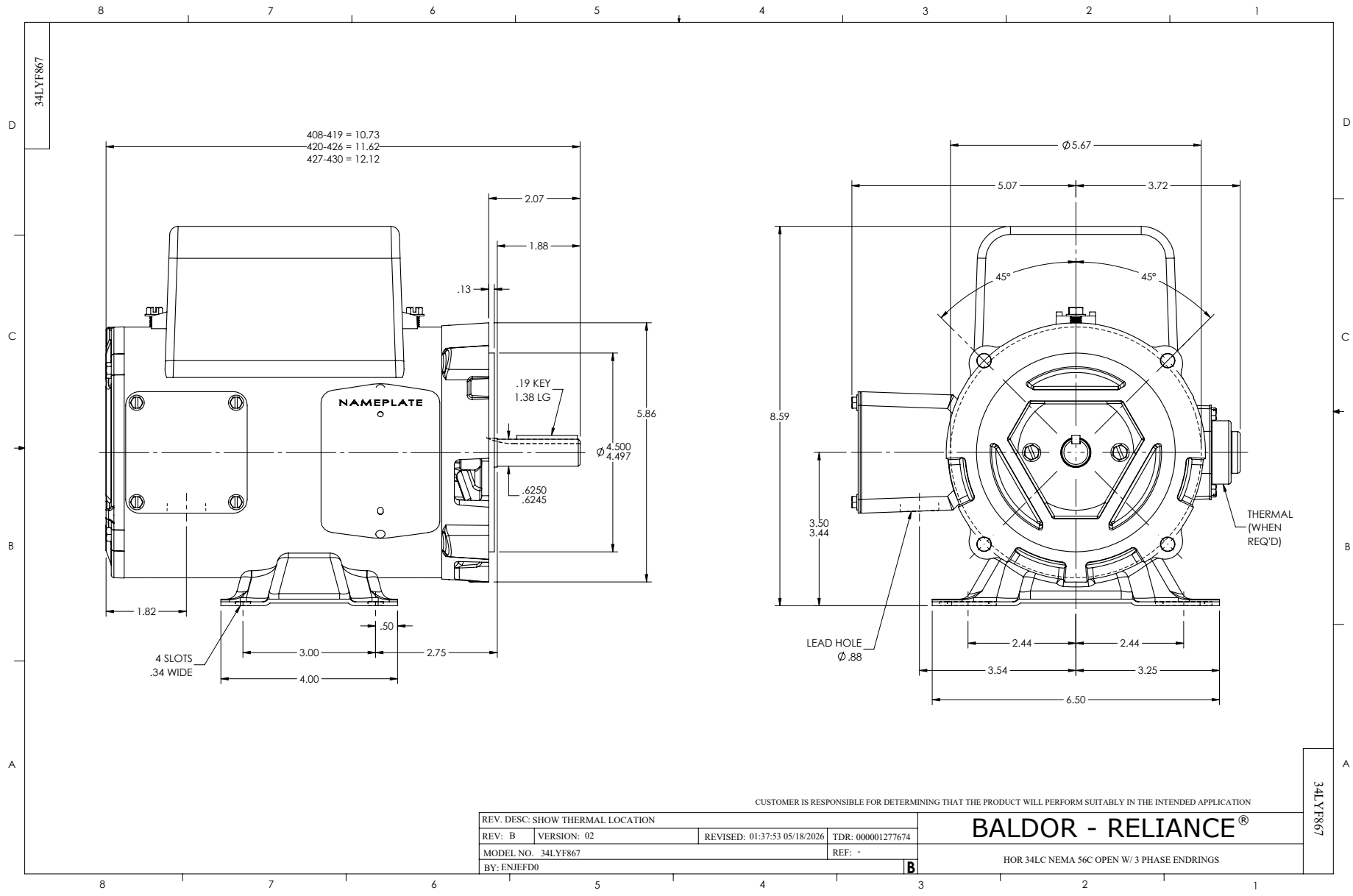
34LYF867
408-419 = 10.73
420-426 = 11.62
427-430 = 12.12
2.07
1.88
.13
.19 KEY
1.38 LG
NAMEPLATE
5.86
Ø 4.500
4.497
.6250
.6245
1.82
.50
4 SLOTS
.34 WIDE
3.00
2.75
4.00
Ø5.67
5.07
3.72
45°
45°
8.59
3.50
3.44
THERMAL
(WHEN
REQ'D)
LEAD HOLE
Ø .88
2.44
2.44
3.54
3.25
6.50
CUSTOMER IS RESPONSIBLE FOR DETERMINING THAT THE PRODUCT WILL PERFORM SUITABLY IN THE INTENDED APPLICATION
REV. DESC: SHOW THERMAL LOCATION
REV: B
VERSION: 02
REVISED: 01:37:53 05/18/2026
TDR: 000001277674
MODEL NO. 34LYF867
REF: -
BY: ENJEFD0
B
BALDOR - RELIANCE®
HOR 34LC NEMA 56C OPEN W/ 3 PHASE ENDRINGS
34LYF867

CD0055

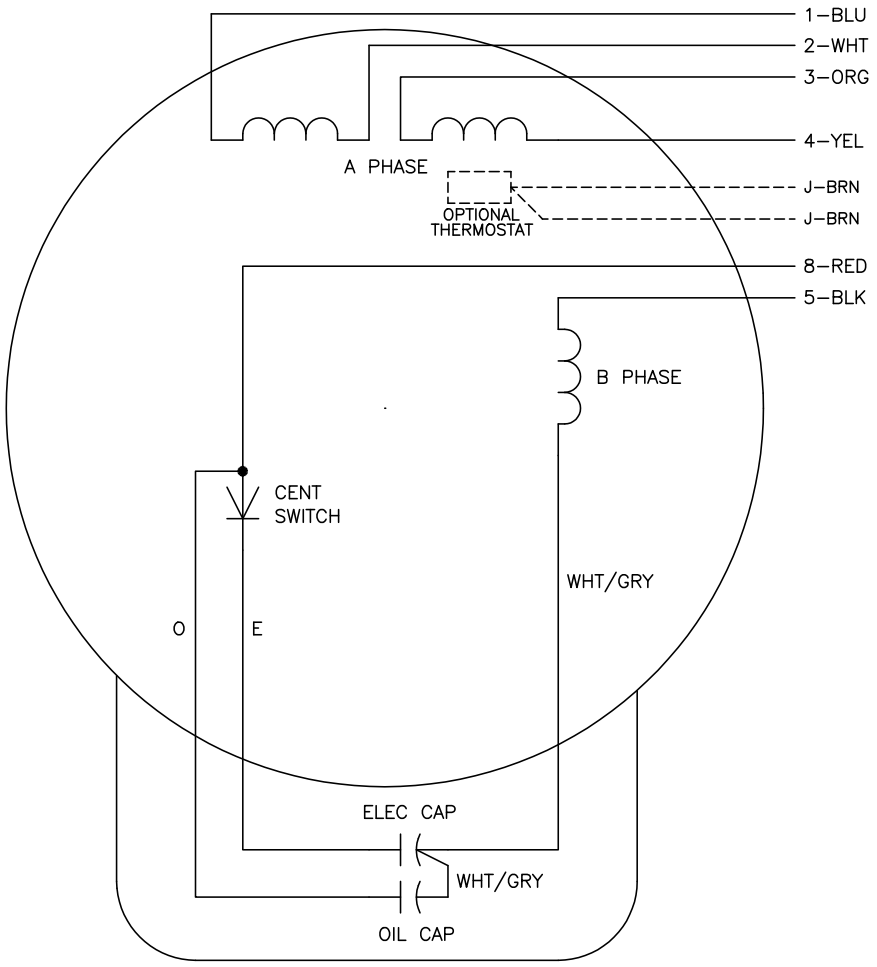

	LINE A	LINE B	JOIN
HIGH STD	1	4,5	2,3,8
HIGH OPP	1	4,8	2,3,5
LOW STD	1,3,8	2,4,5	–
LOW OPP	1,3,5	2,4,8	–

NOTES:

1. STANDARD ROTATION IS CCW FACING END OPPOSITE SHAFT EXTENSION.
2. OPTIONAL THERMOSTAT IS PROVIDED WHEN SPECIFIED.
3. MULTIPLE CAPACITORS ARE CONNECTED IN PARALLEL UNLESS OTHERWISE SPECIFIED.
4. LEAD COLORS ARE OPTIONAL. LEADS MUST ALWAYS BE NUMBERED AS SHOWN.

CD0055

REV. DESC: REVISE TO SHOW OPTIONAL COLORS			BALDOR ELECTRIC Co.
REV. LTR: D	BY: JLP	REVISED: 04/08/99 1:17	TDR: 0178636
CD0055		FILE: AAA00007414	MDL: –
		MTL: –	TYPE LC, DV, REV, 6 LEADS