12LYH992

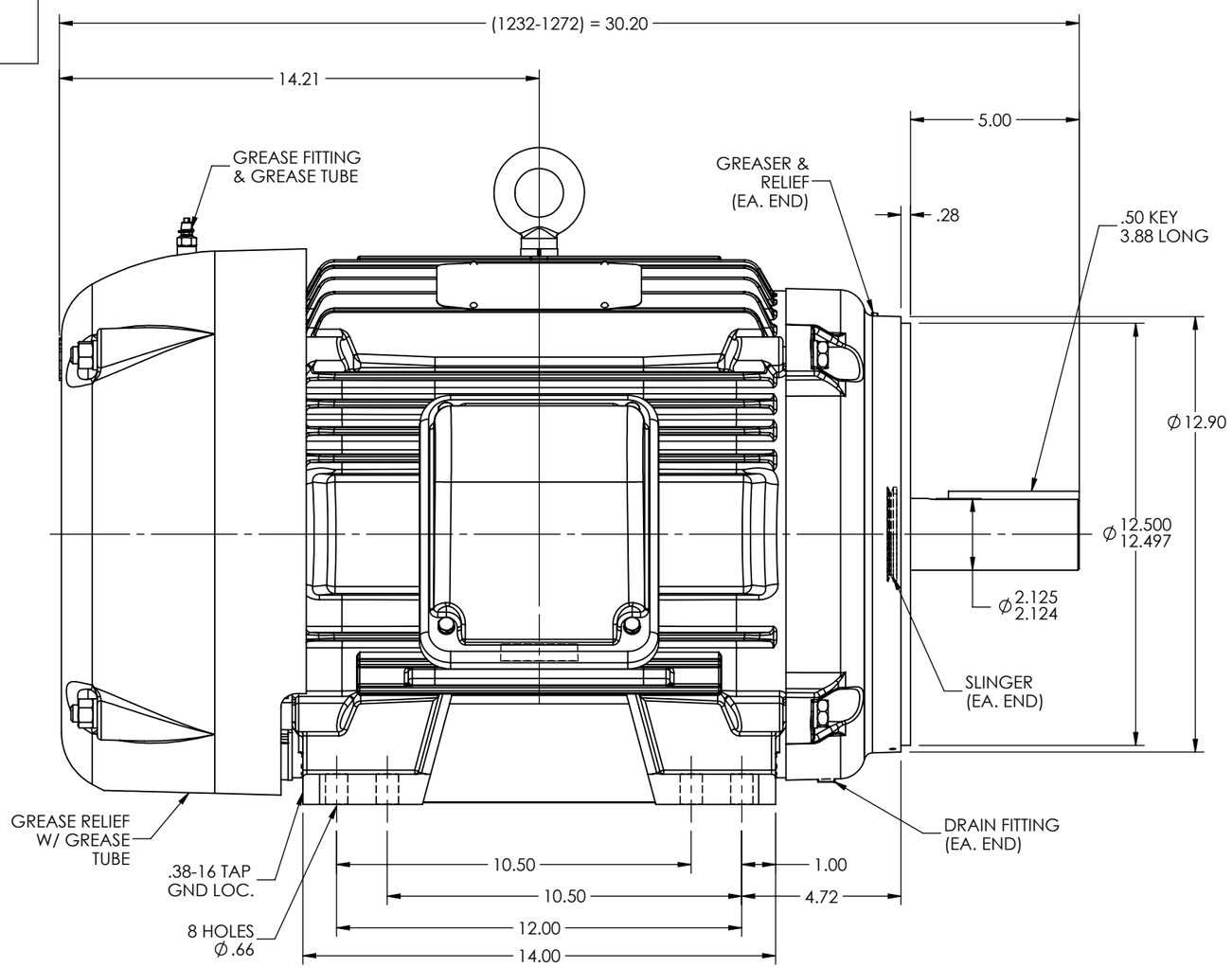

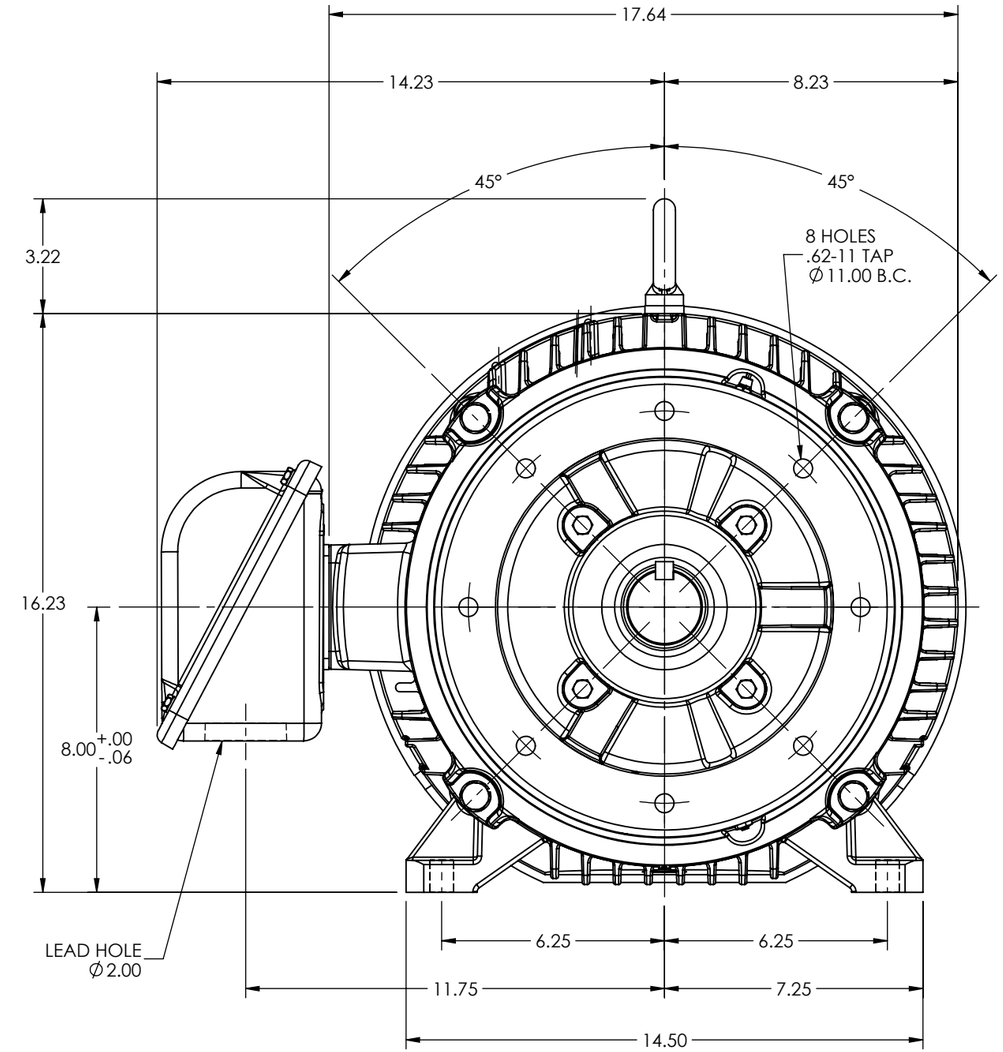

CUSTOMER IS RESPONSIBLE FOR DETERMINING THAT BALDOR'S PRODUCT WILL PERFORM SUITABLY IN THE INTENDED APPLICATION

REV. DESC: LOAD DRAWING TO SOLIDWORKS			
REV: A	VERSION: 01	REVISED: 03:13:05 06/14/2022	TDR: 000001192277
MODEL NO. 12LYH992			REF: -
BY: ENALEM0			B

BALDOR

HORZ TEFC 324-6TC ECP W/6313 PU BRG, CRUSHER DUTY

12LYH992