ABB BALDOR RELIANCE

Customer information packet

CECP84314T-4

60HP, 1780RPM, 3PH, 60HZ, 364TC, A3658M, TEFC
Class - CLI GP A,B,C,D
Division - Division II

Copyright © All product information within this document is subject to ABB Motors and Mechanical Inc. copyright © protection, unless otherwise noted.
9/7/2026 9:57:16 AM

Specifications

Enclosure	TEFC
Frame	364TC
Frame Material	Iron
Frequency	60.00 Hz
Haz Area Class and Group	CLI GP A,B,C,D
Haz Area Division	Division II
Motor Letter Type	Three Phase
Output @ Frequency	60.000 HP @ 60 HZ
Phase	3
Synchronous Speed @ Frequency	1800 RPM @ 60 HZ
Voltage @ Frequency	460.0 V @ 60 HZ
Agency Approvals	CCSAUSEEV
	CURUSEEV
	NEMA PREMIUM
	NEMA_PREMIUM
	UR
Ambient Temperature	40 °C
Auxiliary Box	NO AUXILLARY BOX
Base Indicator	Rigid
Bearing Grease Type	Polyrex EM (-20F +300F)
Constant Torque Speed Range	15-60
Current @ Voltage	70.000 A @ 460.0 V
Design Code	B
Drip Cover	No Drip Cover
Duty Rating	CONT
Efficiency @ 100% Load	95.0 %
Feedback Device	NO FEEDBACK
Heater Indicator	No Heater
High Voltage Full Load Amps	70.0 a
Insulation Class	F
Inverter Code	Inverter Ready
KVA Code	G

Part Detail

Revision	L
Type	AC
Mech. spec.	
Base	
Status	PRD/A
Elec. spec.	A36WG4085
Layout	617428-620
Eff. date	07-24-2025
CD Diagram	CD0006
Poles	04
Leads	3#4
Proprietary	False
Created date	04-23-2021

Lifting Lugs	Standard Lifting Lugs
Max Speed	2700 rpm
Motor Lead Quantity/Wire Size	3 @ 4 AWG
Motor Standards	NEMA
Motor Type	A3658M
Mounting Arrangement	F1
Number of Poles	4
Overall Length	33.48 IN
Power Factor	84
Pulley End Bearing Type	Ball
Pulley Face Code	C-Face
Service Factor	1.15
Shaft Diameter	2.375 IN
Shaft Ground Indicator	No Shaft Grounding
Shaft Rotation	Phase Seq-Std Rot (CCWODE)
Shaft Slinger Indicator	No Slinger
Speed	1780 rpm
Speed Code	Single Speed
Starting Method	Direct on line
Thermal Device - Bearing	None
Thermal Device - Winding	None

Nameplate

NP4388															
CAT #	CECP84314T-4					**FR**	364TC		IP56						
SPEC	A36-5000-4085					**ENCL**	TEFC		**DES**	B					
HZ	60	**PH**	3	**CL**	F	**HP**	60	**SF**	1.15	**PF**	84	**%**	**CODE**	G	
VOLTS	460					**AMPS**	70								
RPM	1780		**MAX RPM**	2700		**SER**									
NEMA NOM. EFF	95	**%**	**RATING**	40C AMB-CONT											
GUAR MIN. EFF	94.1	**%**	**BRG DE**	6313		**BRG ODE**	6313								
CL I DIV 2 GRPS A,B,C,D			**CL I ZONE 2 GRPS**			**IIA,IIB,IIC**		**TEMP T**		3-200	**C**				
CT HZ	15-60		**VT HZ**	0-60											
CHP HZ	60-90		**INV TEMP CL**	200	**C**										
						MTR WT	921	**LBS**							

NP4333					
CAT #	CECP84314T-4	**ROTOR BARS**	47		
SPEC	A36-5000-4085	**STATOR SLOTS**	60		
SER		**MAX CORR KVAR**	13.8		
GREASE	POLYREX EM				
ABMA DE BRG	65BC03J30X	**ODE**	65BC03J30X		
SPACE HEATER LEADS H1-H2:	**TIE LIKE NUMBERS**		**TOGETHER**		
MAX. SPACE HEATER TEMP.	**C**	**V**	**A**	**W**	

AC induction motor performance data

Record #72800 - Typical performance - not guaranteed values

Winding	A36WG4085
Type	A3658M
Enclosure	TEFC

Nameplate data			
Rated Output			60
Volts			460
Full Load Amps			70
R.P.M.			1780
Hz	60	Phase	3
KVA Code			G
S.F.			1.15
NEMA Nom. Eff.	95	Power Factor	84
Duty			CONT
S.F. Amps			

460 V, 60 Hz:

High Voltage Connection	
Full Load Torque	176.4 LB-FT
Start Configuration	direct on line
Breakdown Torque	422 LB-FT
Pull-up Torque	276 LB-FT
Locked-rotor Torque	352 LB-FT
Starting Current	462 A
No-load Current	24.8
Line-line Res. @ 25°C	0.10816 Ω
Temp. Rise @ Rated Load	56°C
Temp. Rise @ S.F. Load	70°C
Locked-rotor Power Factor	32.1
Rotor inertia	0

Load Characteristics 460 V, 60 Hz, 60 HP

% of Rated Load	NL	25	50	75	100	125	150	SF
Power Factor	4	51	73	81	84	86	85	85
Efficiency	0	92.6	95.1	95.4	95.2	94.6	93.8	94.8
Speed	1798.9	1796.4	1792.4	1788	1783.7	1778.3	1772.3	1780
Line amperes	24.8	29.7	40.7	54.4	69.7	86.6	105	79.8

ABB BALDOR RELIANCE

CUSTOMER INFORMATION PACKET

CECP84314T-4 - 60HP, 1780RPM, 3PH, 60HZ, 364TC, A3658M, TEFC

WINDING # A36WG4085

60 HP 3 PH 60 HZ 1780 RPM 460 V A3658M

TORQUES (LB-FT): PO=422.00 PU=276.00 LR=352.00 LRA=462.00

REVIEW

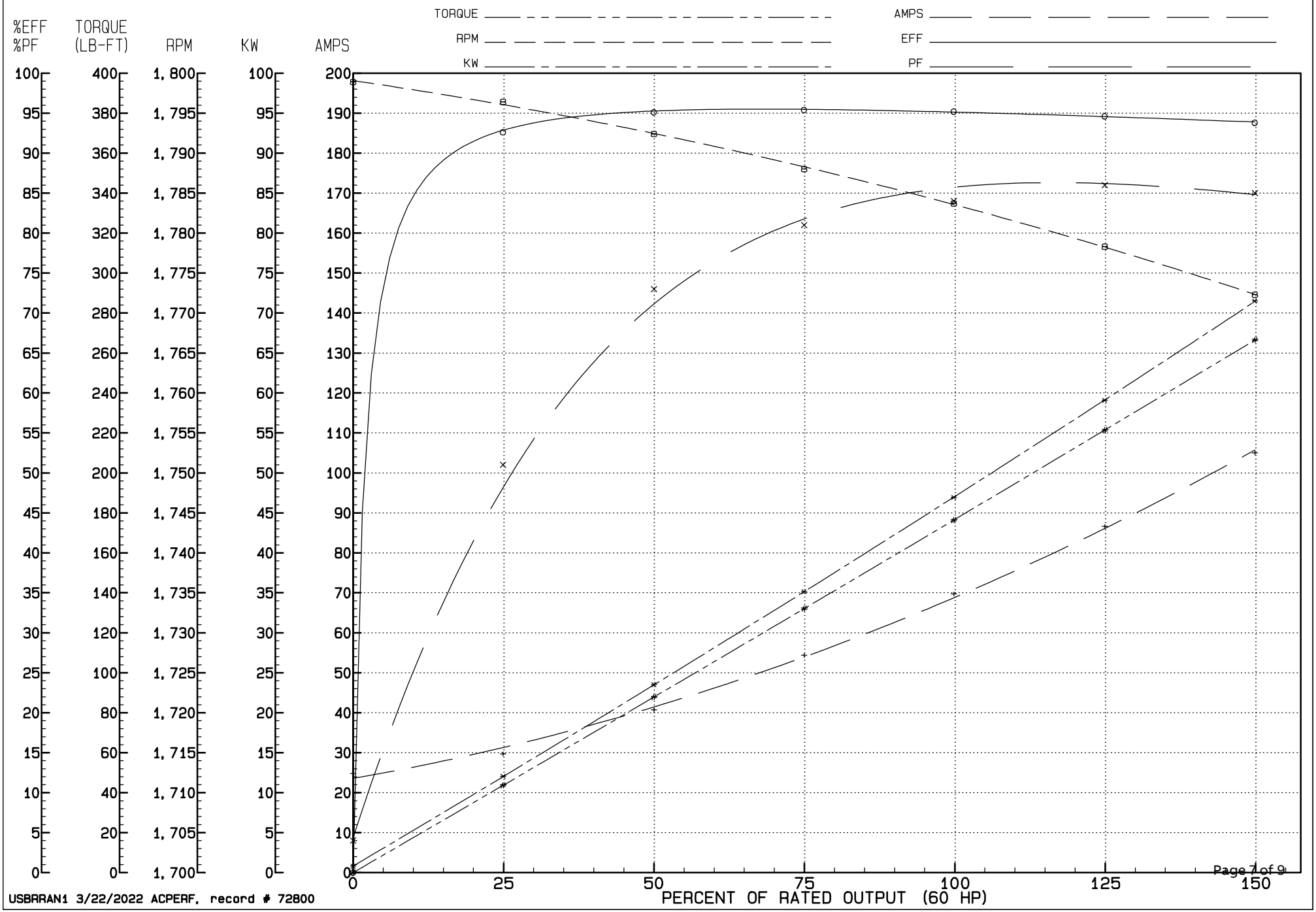

USBRRAN1 3/22/2022 ACPERF, record # 72800

DUTY MASTER ALTERNATING CURRENT MOTORS

617428-620

ENCLOSURE: TOTALLY ENCLOSED

SQUIRREL-CAGE INDUCTION

COOLING: FAN COOLED

MOUNTING: FOOT, F-1

E365TC/E364TC FRAME MOUNTING HOLES

ENCLOSURE ENHANCEMENT: 841-XL

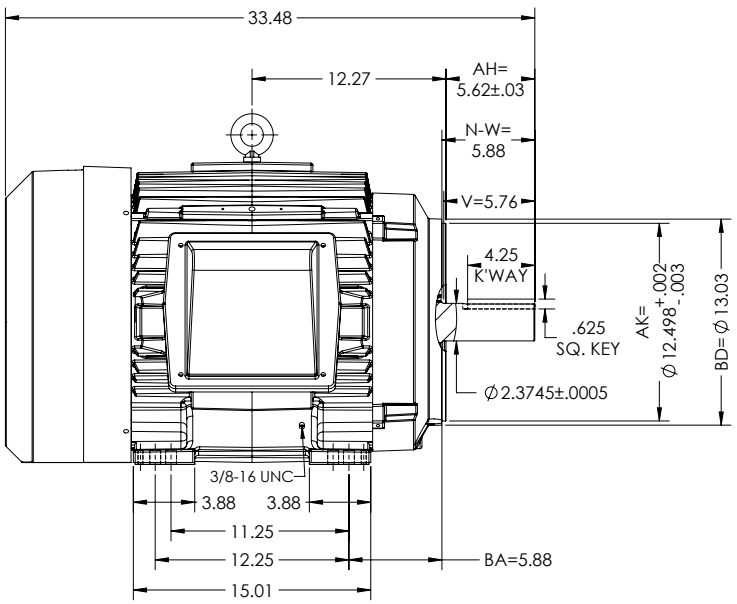

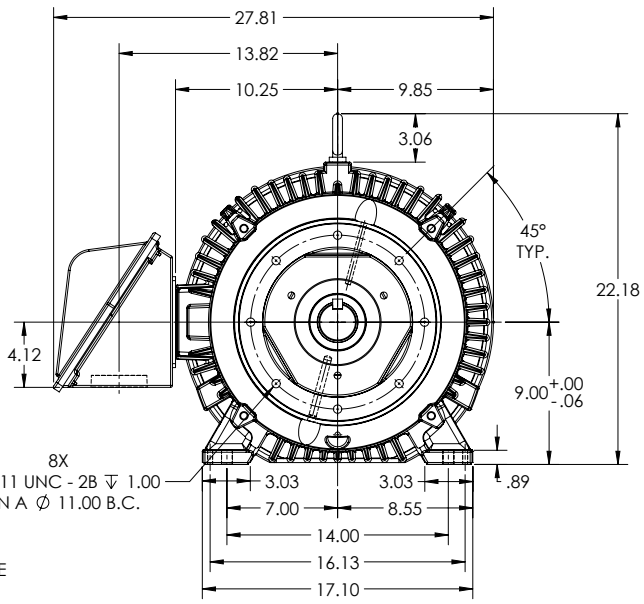

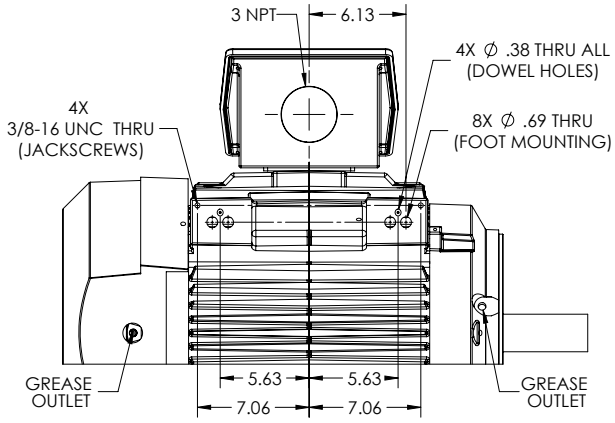

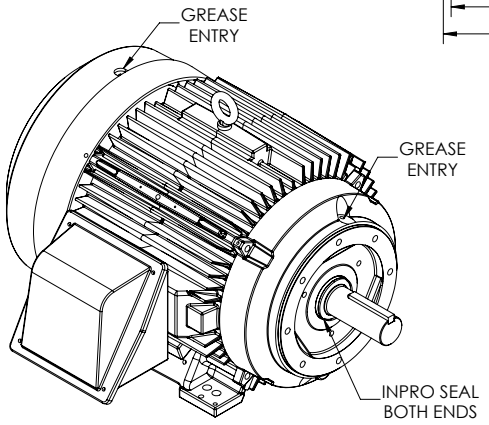

DIMENSIONS ARE IN INCHES.
MOTOR WEIGHT (LBS) = 834 ± 15% DEPENDING ON RATING.
CUSTOMER IS RESPONSIBLE FOR DETERMINING THAT MOTOR PERFORMANCE IS SUITABLE IN THE APPLICATION.

SHEET NUMBER 1 OF 1

617428-620

FACE RUNOUT & ECCENTRICITY IS .007 MAX. T.I.R.
IF MOUNTING CLEARANCE DETAILS ARE REQUIRED, CONSULT FACTORY.
MAX PERMISSIBLE SHAFT RUNOUT WHEN MEASURED AT END OF STANDARD SHAFT EXTENSION IS .0015 T.I.R.

REV. DESC: NEW DRAWING			
REV: -	VERSION: 00	REVISED: 09:06:06 01/04/2019	TDR: 000001095165
MODEL NO. 617428-620			
BY: USJEDIL			C

BALDOR

E365/364TC TEFC F1 FOOT/CI BOX/INPROS/JACKSCREWS/DOWELS

617428-620

CD0006

TYPICAL WYE–CONNECTED MOTOR

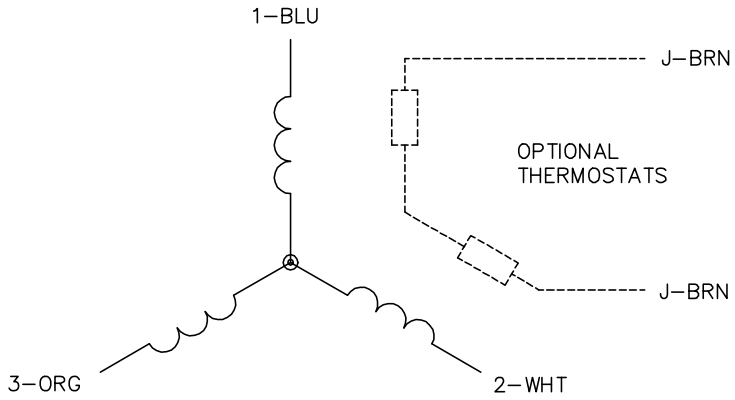

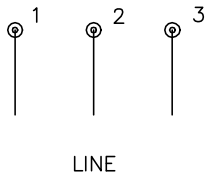

TYPICAL DELTA–CONNECTED MOTOR

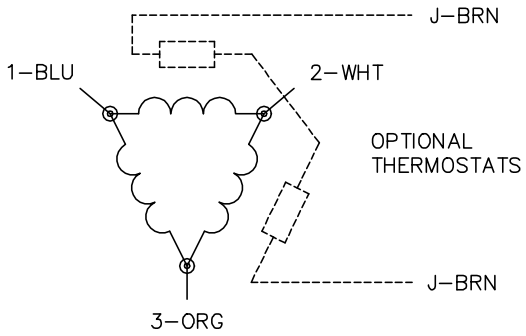

NOTES:

1. THREE LEAD MOTOR MAY BE EITHER WYE CONNECTED OR DELTA CONNECTED.
2. INTERCHANGE ANY TWO LINE LEADS TO REVERSE ROTATION.
3. OPTIONAL THERMOSTATS ARE PROVIDED WHEN SPECIFIED.
4. ACTUAL NUMBER OF INTERNAL PARALLEL CIRCUITS MAY VARY.
5. LEAD COLORS ARE OPTIONAL. LEADS MUST BE NUMBERED AS SHOWN.

CD0006

REV. DESC: ADD CLASS CONN00000007		
REV. LTR: E	VERSION: 01	TDR: 000001099922
FILE: \AAA\00005\141	REVISED: 10:24:49 02/19/2019	BY: ENBRIR0
MTL: –		

BALDOR - RELIANCE®

3PH, SV, 3 LEADS, WYE OR DELTA CONNECTED

SH 1 of 1