ABB BALDOR RELIANCE

Customer information packet

CECP84313T-4

75HP, 3555RPM, 3PH, 60HZ, 365TSC, A36068M, TEF
Class - CLI GP A,B,C,D
Division - Division II

Copyright © All product information within this document is subject to ABB Motors and Mechanical Inc. copyright © protection, unless otherwise noted.
11/23/2026 8:13:38 AM

Specifications

Enclosure	TEFC
Frame	365TSC
Frame Material	Iron
Frequency	60.00 Hz
Haz Area Class and Group	CLI GP A,B,C,D
Haz Area Division	Division II
Motor Letter Type	Three Phase
Output @ Frequency	75.000 HP @ 60 HZ
Phase	3
Synchronous Speed @ Frequency	3600 RPM @ 60 HZ
Voltage @ Frequency	460.0 V @ 60 HZ
Agency Approvals	CCSAUSEEV
	NEMA PREMIUM
	NEMA_PREMIUM
	UR
	CCSA US
Ambient Temperature	40 °C
Auxiliary Box	NO AUXILLARY BOX
Base Indicator	Rigid
Bearing Grease Type	Polyrex EM (-20F +300F)
Constant Torque Speed Range	15-60
Current @ Voltage	80.700 A @ 460.0 V
Design Code	B
Drip Cover	No Drip Cover
Duty Rating	CONT
Efficiency @ 100% Load	94.5 %
Enclosure Modification	841
Feedback Device	NO FEEDBACK
Haz Area Temp Code	T3
Heater Indicator	No Heater
High Voltage Full Load Amps	80.7 a
Insulation Class	F

Part Detail

Revision	J
Type	AC
Mech. spec.	
Base	
Status	PRD/A
Elec. spec.	A36WG0736
Layout	617428-621
Eff. date	08-26-2024
CD Diagram	416820-036
Poles	02
Leads	3#2
Proprietary	False
Created date	01-03-2019

Inverter Code	Inverter Duty
IP Rating	IP56
KVA Code	F
Lifting Lugs	No Lifting Lugs
Max Speed	4500 rpm
Motor Lead Quantity/Wire Size	3 @ 2 AWG
Motor Standards	NEMA
Motor Type	A36068M
Mounting Arrangement	F1
No Load Current	15.6 a
Number of Poles	2
Overall Length	31.36 IN
Power Factor	92
Pulley End Bearing Type	Ball
Pulley Face Code	C-Face
Service Factor	1.15
Shaft Diameter	1.875 IN
Shaft Ground Indicator	No Shaft Grounding
Shaft Rotation	Phase Seq-Std Rot (CCWODE)
Shaft Slinger Indicator	No Slinger
Speed	3555 rpm
Speed Code	Single Speed
Starting Method	Direct on line
Thermal Device - Bearing	None
Thermal Device - Winding	None

Nameplate

NP4388

CAT #	CECP84313T-4					**FR**	365TSC		IP56									
SPEC	A36-0730-0736					**ENCL**	TEFC		**DES**	B								
HZ	60	**PH**	3	**CL**	F	**HP**	75	**SF**	1.15	**PF**	92	**%**	**CODE**	F				
VOLTS	460					**AMPS**	80.7											
RPM	3555			**MAX RPM**	4500	**SER**												
NEMA NOM. EFF	94.5	**%**		**RATING**	40C AMB-CONT													
GUAR MIN. EFF	93.6	**%**		**BRG DE**	6313		**BRG ODE**	6313										
CL I DIV 2 GRPS A,B,C,D				**CL I ZONE 2 GRPS**			**IIA,IIB,IIC**		**TEMP T**	3-200	**C**							
CT HZ	15-60			**VT HZ**	3-60													
CHP HZ	60-75			**INV TEMP CL**	200	**C**												
						MTR WT	1007	**LBS**										

NP4333

CAT #	CECP84313T-4	**ROTOR BARS**	38
SPEC	A36-0730-0736	**STATOR SLOTS**	48
SER		**MAX CORR KVAR**	5
GREASE	POLYREX EM		
ABMA DE BRG	65BC03J30X **ODE**	65BC03J30X	

SPACE HEATER LEADS H1-H2: **TIE LIKE NUMBERS** **TOGETHER**

MAX. SPACE HEATER TEMP.	**C**	**V**		**A**		**W**	

DUTY MASTER ALTERNATING CURRENT MOTORS

617428-621

ENCLOSURE: TOTALLY ENCLOSED

SQUIRREL-CAGE INDUCTION

COOLING: FAN COOLED

MOUNTING: FOOT, F-1

E365TSC/E364TSC FRAME MOUNTING HOLES

ENCLOSURE ENHANCEMENT: 841-XL

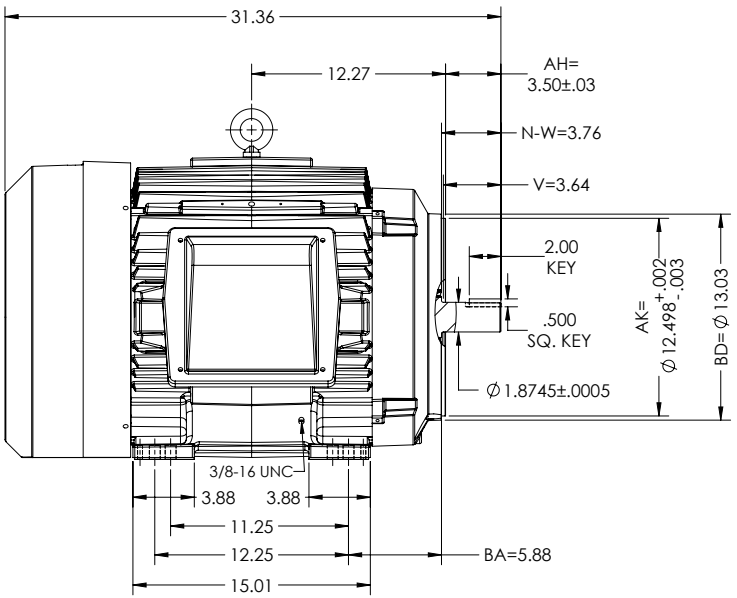

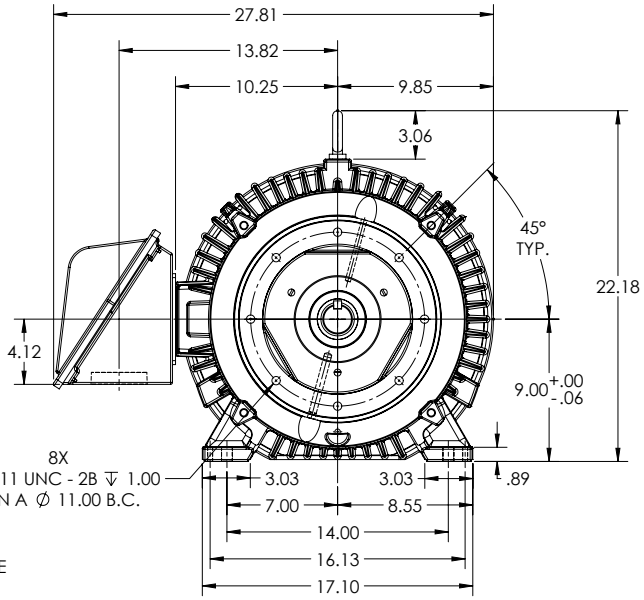

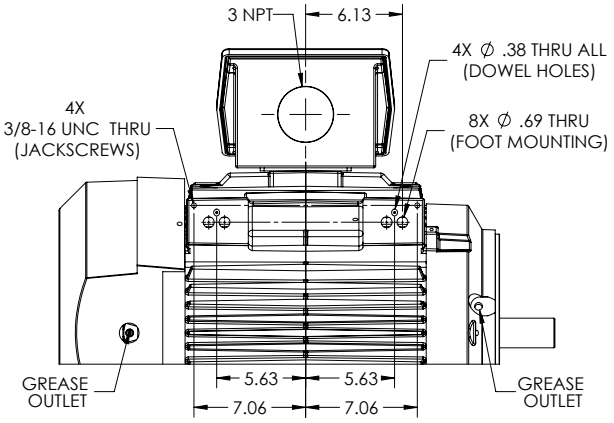

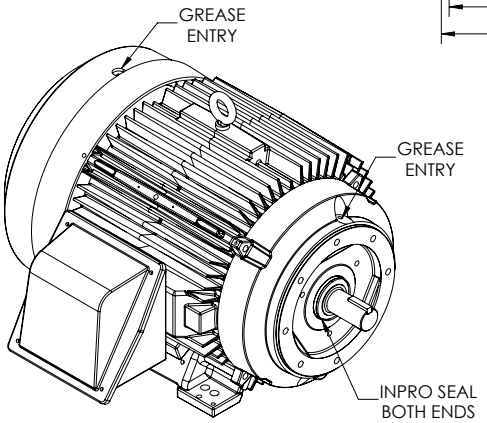

DIMENSIONS ARE IN INCHES.
MOTOR WEIGHT (LBS) = 834 ± 15% DEPENDING ON RATING.
CUSTOMER IS RESPONSIBLE FOR DETERMINING THAT MOTOR PERFORMANCE IS SUITABLE IN THE APPLICATION.

FACE RUNOUT & ECCENTRICITY IS .007 MAX. T.I.R.
IF MOUNTING CLEARANCE DETAILS ARE REQUIRED, CONSULT FACTORY.
MAX PERMISSIBLE SHAFT RUNOUT WHEN MEASURED AT END OF STANDARD SHAFT EXTENSION IS .0015 T.I.R.

SHEET NUMBER 1 OF 1

617428-621

REV. DESC: NEW DRAWING			
REV: -	VERSION: 00	REVISED: 11:29:53 01/04/2019	TDR: 000001095168
MODEL NO. 617428-621			
BY: USJEDIL			C

BALDOR

E365/364TSC TEFC F1 FOOT/CI BOX/INPROS/JACKSCREWS/DOWELS

617428-621

416820–036

A–C MOTOR
CONNECTION DIAGRAM
STANDARD 3 LEAD CONNECTED

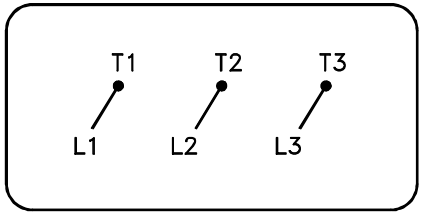

(N.P. 1575–BA)

416820–036

REV. DESC: LOADED TO BUS, C/R 335225			BALDOR
REV. LTR: –	VERSION: 00	TDR: 000000538207	
FILE: \MGA\00000\682		REVISED: 11:54:06 04/30/2010	CONN DIAG – STANDARD 3 LEAD
MTL: –		BY: RAGRA	SH 1 of 1