12LY-000-140

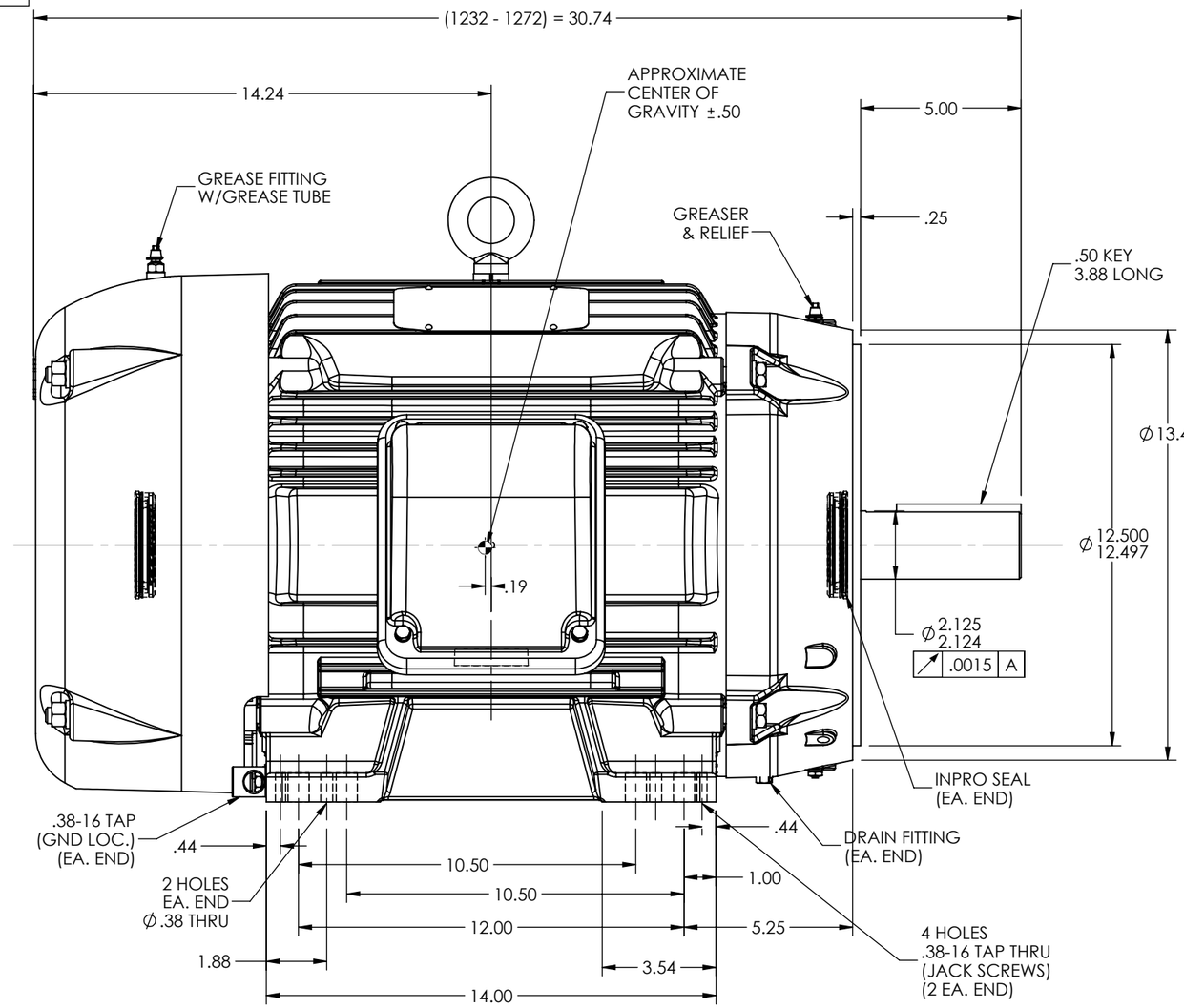

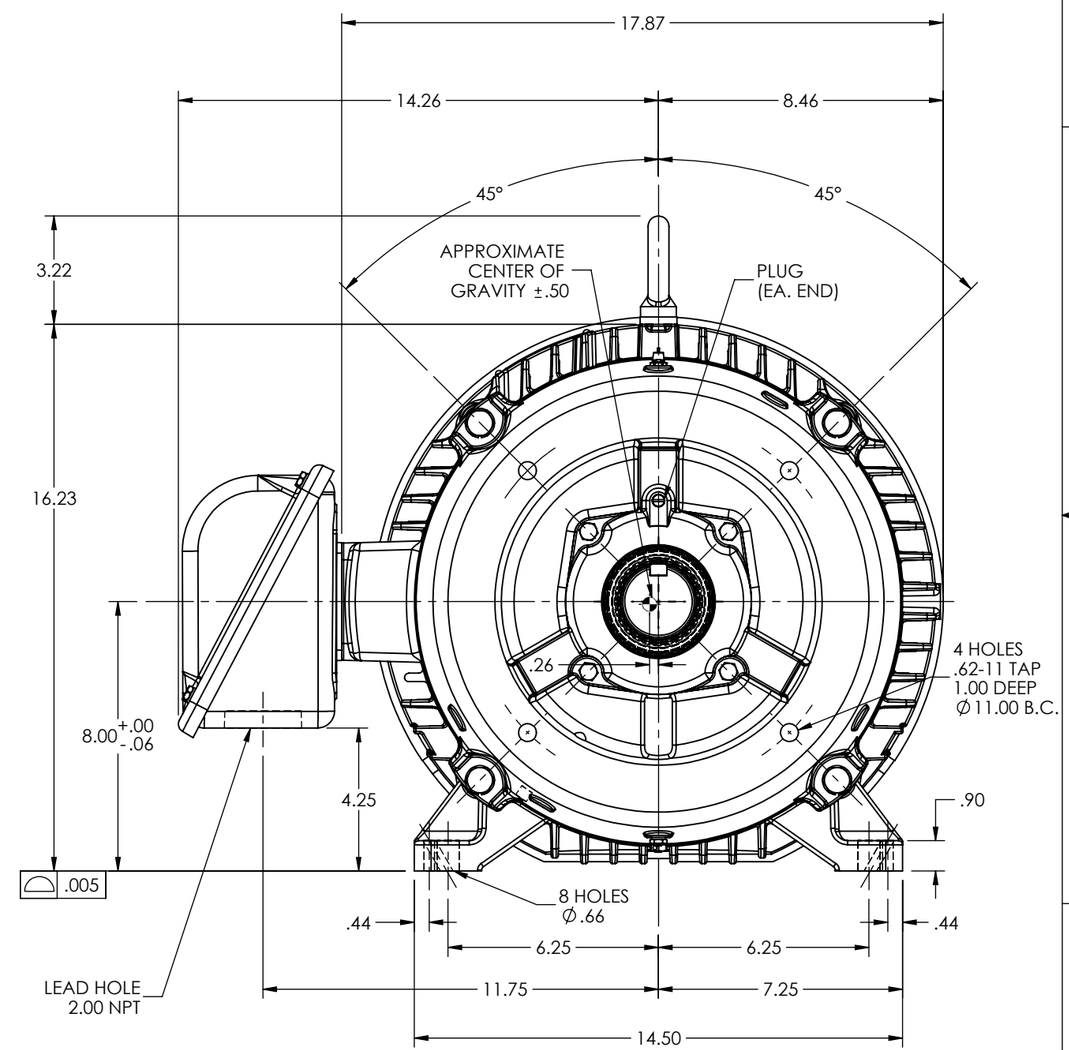

CUSTOMER IS RESPONSIBLE FOR DETERMINING THAT THE PRODUCT WILL PERFORM SUITABLY IN THE INTENDED APPLICATION

REV. DESC: UPDATE NP GRAPHICS TO MATCH NP USED ON CAT SPECS			
REV: B	VERSION: 02	REVISED: 11:16:32 11/02/2022	TDR: 000001194199
MODEL NO. 12LY-000-140			REF: -
BY: USBUFRA			B

BALDOR - RELIANCE®

HOR TEFC 324-6TC IEEE-841 312 BRGS, DOWEL PINS & JACK SCREWS

12LY-000-140