617427-014

DUTY MASTER ALTERNATING CURRENT MOTORS

SQUIRREL-CAGE INDUCTION

ENCLOSURE: TOTALLY ENCLOSED

FRAME G447TC ABOVE NEMA RATINGS

COOLING: FAN COOLED

MOUNTING: FOOT, NEMA "C" FACE

INCLUDES 445TC FRAME MOUNTING HOLES

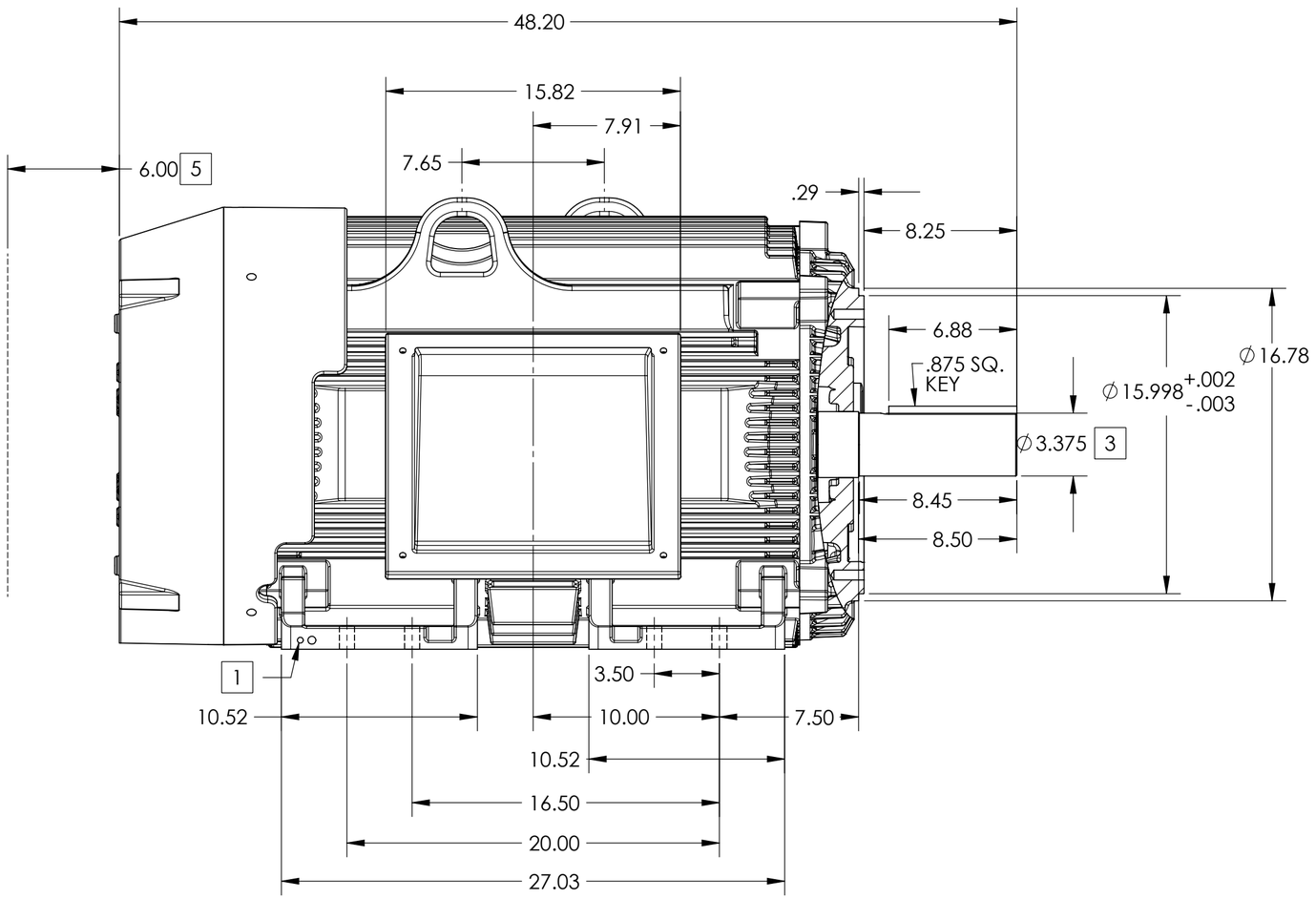

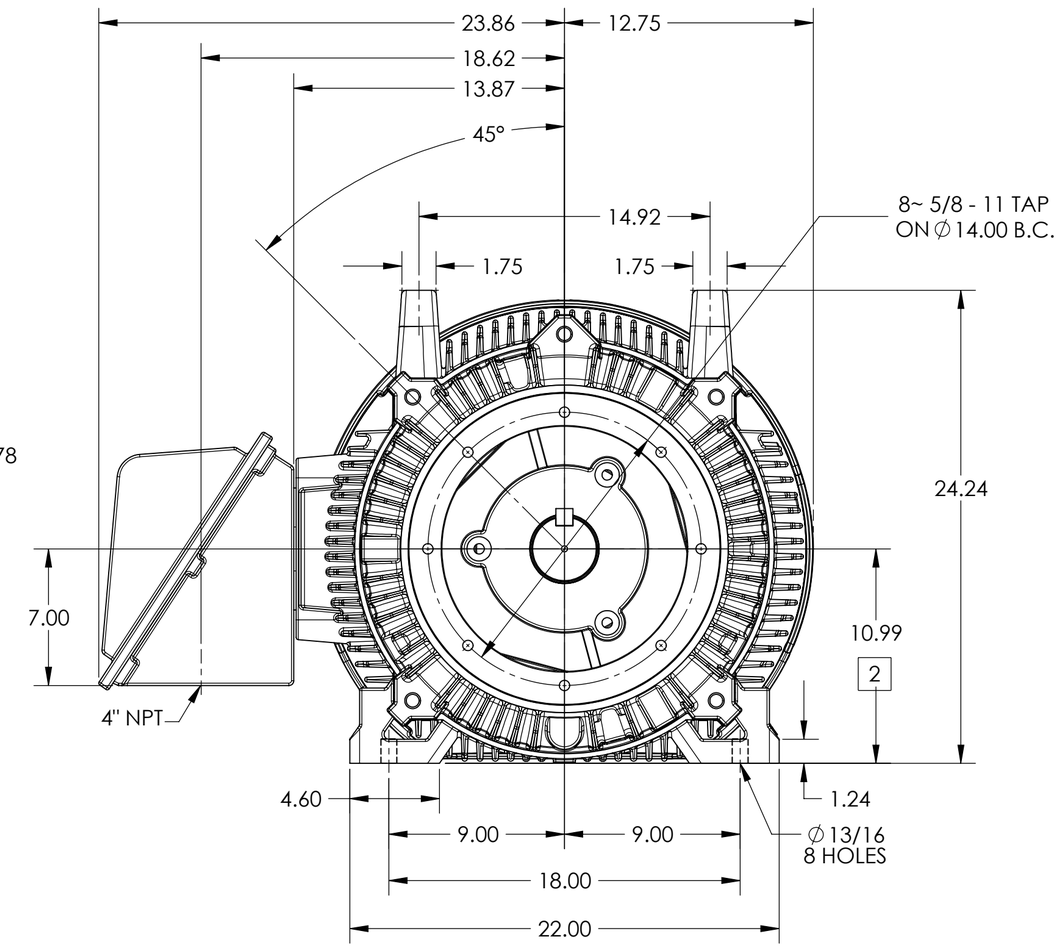

1. GROUND HOLES QTY 1 1/2-13 TAP; QTY 1 3/8-16 TAP
2. VARIES +.00,-.06
3. VARIES +.000,-.001
4. MOTOR WEIGHTS MAY VARY BY 15% DEPENDING ON RATING.
5. OBSTRUCTION MUST NO ENCROACH ON AIR INLET.

FACE RUNOUT AND ECCENTRICTY = .007 T.I.R. MAX

4 WEIGHT (LBS): 2515

CONDUIT BOX LOCATED ON OPPOSITE SIDE WHEN F-2.
IF MOUNTING CLEARANCE DETAILS ARE REQUIRED, CONSULT FACTORY.
MAXIMUM PERMISSIBLE SHAFT RUNOUT WHEN MEASURED AT END OF STANDARD SHAFT EXTENSION IS .003" T.I.R. TO 5 INCH DIA.

DIMENSIONS ARE IN INCHES

CUSTOMER IS RESPONSIBLE FOR DETERMINING THAT MOTOR PERFORMANCE IS SUITABLE IN THE APPLICATION.

SHEET NUMBER
1 OF 1

617427-014

REV. DESC: ADD AK TOL.& NOTE FOR FACE RUNOUT / ECCENTRICITY			
REV: D	VERSION: 04	REVISED: 02:30:26 04/20/2021	TDR: 000001166213
MODEL NO. 617427-014			REF:
BY: RAGGDM	Material:		C

BALDOR

G447TC/445TC STD – FOOTED – SIDE/CENTER C/B

617427-014