ABB BALDOR RELIANCE

Customer information packet

CECP4310T

60HP, 3560RPM, 3PH, 60HZ, 364TSC, A36056M, TEF
Class - CLI GP A,B,C,D
Division - Division II

Copyright © All product information within this document is subject to ABB Motors and Mechanical Inc. copyright © protection, unless otherwise noted.
11/27/2026 4:06:55 AM

Specifications

Enclosure	TEFC
Frame	364TSC
Frame Material	Iron
Frequency	60.00 Hz
Haz Area Class and Group	CLI GP A,B,C,D
Haz Area Division	Division II
Motor Letter Type	Three Phase
Output @ Frequency	60.000 HP @ 60 HZ
Phase	3
Synchronous Speed @ Frequency	3600 RPM @ 60 HZ
Voltage @ Frequency	230.0 V @ 60 HZ
	460.0 V @ 60 HZ
Agency Approvals	NEMA PREMIUM
	NEMA_PREMIUM
	UR
	CCSAUSEEV
Ambient Temperature	40 °C
Auxiliary Box	NO AUXILLARY BOX
Base Indicator	Rigid
Bearing Grease Type	Polyrex EM (-20F +300F)
Constant Torque Speed Range	6-60
Current @ Voltage	130.000 A @ 230.0 V
	143.000 A @ 208.0 V
	65.100 A @ 460.0 V
Design Code	B
Drip Cover	No Drip Cover
Duty Rating	CONT
Efficiency @ 100% Load	93.6 %
Enclosure Modification	Severe Duty Features
Feedback Device	NO FEEDBACK
Haz Area Temp Code	T3
Heater Indicator	No Heater

Part Detail

Revision	H
Type	AC
Mech. spec.	
Base	
Status	PRD/A
Elec. spec.	A36WG1558
Layout	617428-135
Eff. date	07-30-2025
CD Diagram	416820-002
Poles	02
Leads	3#4,6#6
Proprietary	False
Created date	10-25-2016

High Voltage Full Load Amps	65.1 a
Insulation Class	F
Inverter Code	Inverter Duty
IP Rating	NONE
KVA Code	G
Lifting Lugs	Standard Lifting Lugs
Max Speed	4500 rpm
Motor Lead Quantity/Wire Size	3 @ 4 AWG
Motor Standards	NEMA
Motor Type	A36056M
Mounting Arrangement	F1
Number of Poles	2
Overall Length	31.31 IN
Power Factor	91
Product Family	General Industrial
Pulley End Bearing Type	Ball
Pulley Face Code	C-Face
Service Factor	1.15
Shaft Diameter	1.875 IN
Shaft Ground Indicator	No Shaft Grounding
Shaft Rotation	Reversible
Shaft Slinger Indicator	Shaft Slinger
Speed	3560 rpm
Speed Code	Single Speed
Starting Method	Direct on line
Thermal Device - Bearing	None
Thermal Device - Winding	None

Nameplate

NP4033LUA

CAT #	CECP4310T	**SER**		**CC**	010A						
SPEC	A36-7790-1558	**RATING**	40C AMB-CONT								
HZ	**VOLTS**	**AMPS**	**RPM**	**HP**	**CODE**	**SF**	**DES**	**PF**		**NEMA NOM. EFF**	
60	230/460	130/65.1	3560	60	G	1.15	B	91	%	93.6	%
									%		%

PH	3	**CL**	F	**MAX RPM**	4500	**MAX CORR KVAR**	6.5						
BRG	**DE**	6313	**ODE**	6313	**ENCL**	TEFC	**FR**	364TSC	**IP**	55			
GREASE	POLYREX EM						**MTR WT**	897	**LBS**				
	CL I DIV 2 GRPS A,B,C,D			**CL I ZONE 2 GRPS**			**IIA,IIB,IIC**		**TEMP T**	200	**C**		
INV READY	**CT**	15-60	**HZ**	4:1	**VT**	3-60	**HZ**	20:1	**CHP**	60-75	**HZ**	1.25:1	
INV TEMP CL	200	**C**	**USABLE AT**	50HP 190/380V 133/66.5A					SF1.0				

DUTY MASTER ALTERNATING CURRENT MOTORS

617428-135

ENCLOSURE: TOTALLY ENCLOSED

SQUIRREL-CAGE INDUCTION

MOUNTING: FOOT, F-1 SIDE

E365TSC/E364TSC MOUNTING HOLES

COOLING: FAN COOLED

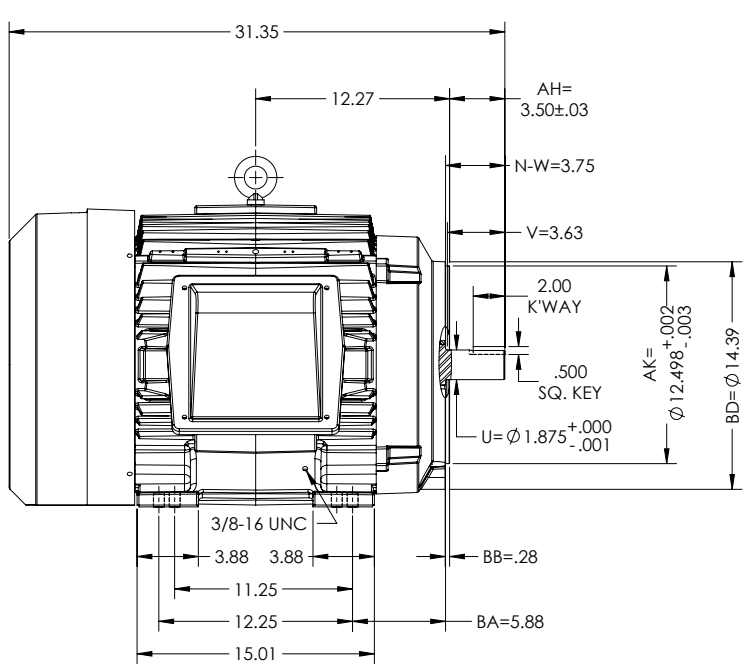

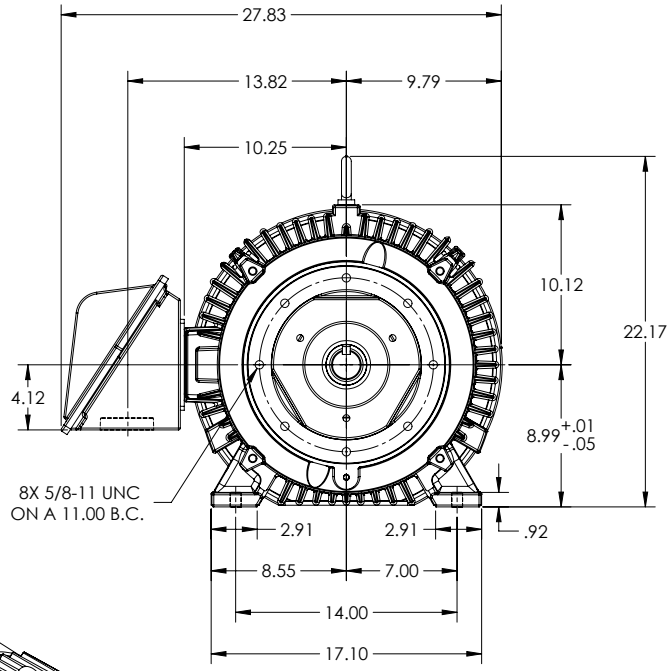

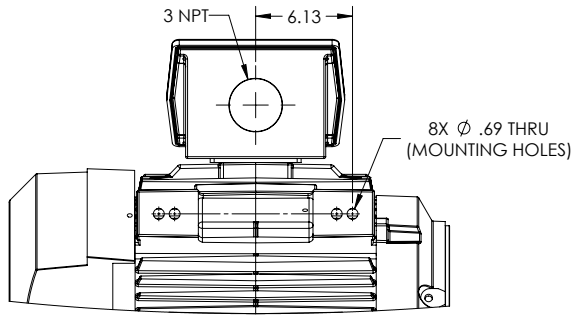

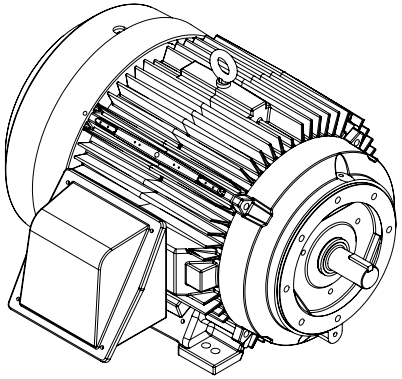

DIMENSIONS ARE IN INCHES.
WEIGHT =900 LBS +/- 15% DEPENDING ON RATING.
CUSTOMER IS RESPONSIBLE FOR DETERMINING THAT MOTOR PERFORMANCE IS SUITABLE IN THE APPLICATION.

FACE & ECCENTRICITY RUNOUT = .007 T.I.R.
IF MOUNTING CLEARANCE DETAILS ARE REQUIRED, CONSULT FACTORY.
MAX PERMISSIBLE SHAFT RUNOUT WHEN MEASURED AT END OF STANDARD SHAFT EXTENSION IS .003" T.I.R.

SHEET NUMBER 1 OF 2

617428-135

REV. DESC: UPDATE DS QUALITY			
REV: A	VERSION: 01	REVISED: 11:26:22 07/25/2023	TDR: 000001213202
MODEL NO. 617428-135			
BY: USJEDIL			C

BALDOR

E365/364TSC TEFC FOOT F1/CAST IRON CONDUIT BOX

617428-135

DUTY MASTER ALTERNATING CURRENT MOTORS

617428-135

ENCLOSURE: TOTALLY ENCLOSED

SQUIRREL-CAGE INDUCTION

MOUNTING: FOOT, F-1 SIDE

E365TSC/E364TSC MOUNTING HOLES

COOLING: FAN COOLED

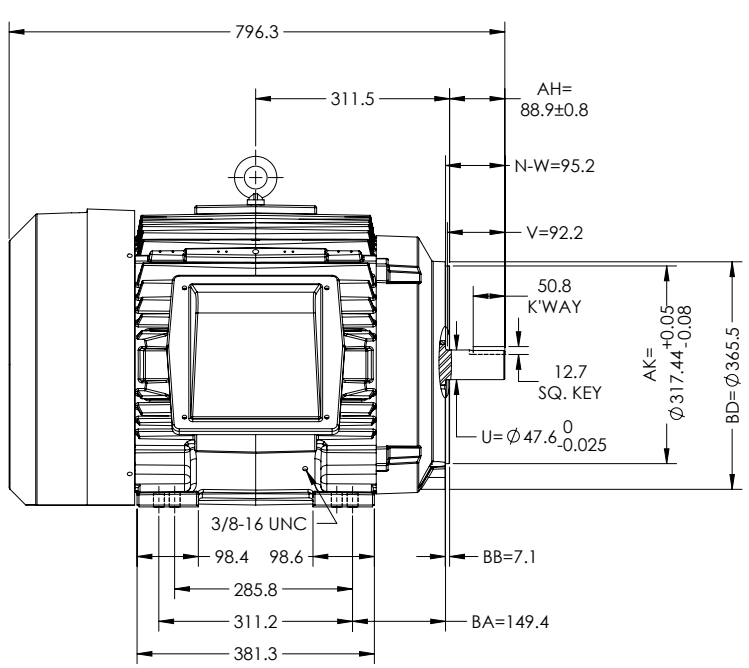

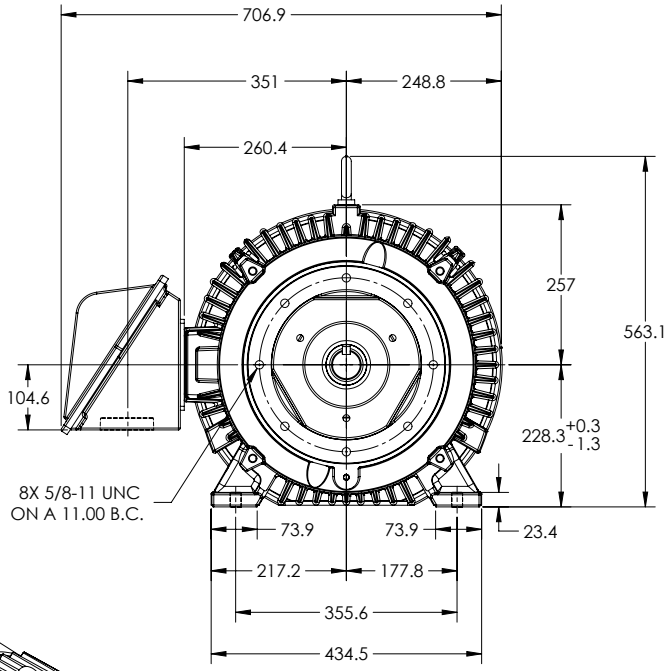

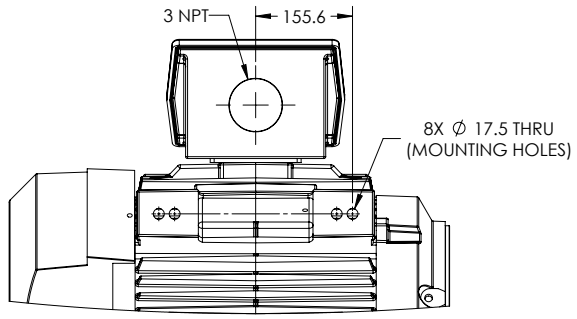

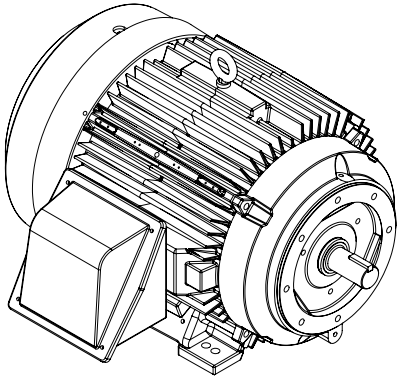

DIMENSIONS ARE IN MILLIMETERS.
WEIGHT = 408 KG +/- 15% DEPENDING ON RATING.
CUSTOMER IS RESPONSIBLE FOR DETERMINING THAT MOTOR PERFORMANCE IS SUITABLE IN THE APPLICATION.

SHEET NUMBER 2 OF 2

617428-135

FACE & ECCENTRICITY RUNOUT = .18 T.I.R.
IF MOUNTING CLEARANCE DETAILS ARE REQUIRED, CONSULT FACTORY.
MAX PERMISSIBLE SHAFT RUNOUT WHEN MEASURED AT END OF STANDARD SHAFT EXTENSION IS .08 T.I.R.

REV. DESC: UPDATE DS QUALITY			
REV: A	VERSION: 01	REVISED: 11:26:22 07/25/2023	TDR: 000001213202
MODEL NO. 617428-135			
BY: USJEDIL			C

BALDOR

E365/364TSC TEFC FOOT F1/CAST IRON CONDUIT BOX

617428-135

416820-002

A-C MOTOR
CONNECTION DIAGRAM
STANDARD 9 LEAD DELTA-CONNECTED

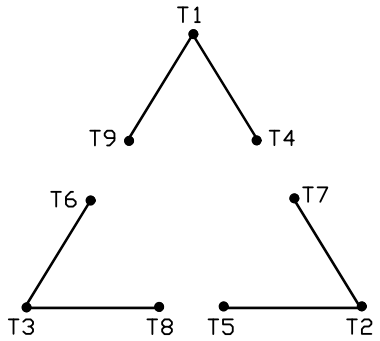

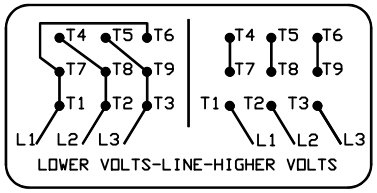

(N. P. 1575-B)

REV. DESC: ADJUST TEXT DARKNESS		
REV. LTR: B	VERSION: 02	TDR: 000001285318
FILE: \RAG\00022\453	REVISED: 09:36:26 09/24/2026	BY: USJOSUL
MTL: –		

ABB

CONN DIAG – STANDARD 9 LEAD, DELTA-CONNECTED

SH1 of 1

416820-002