10LYH406

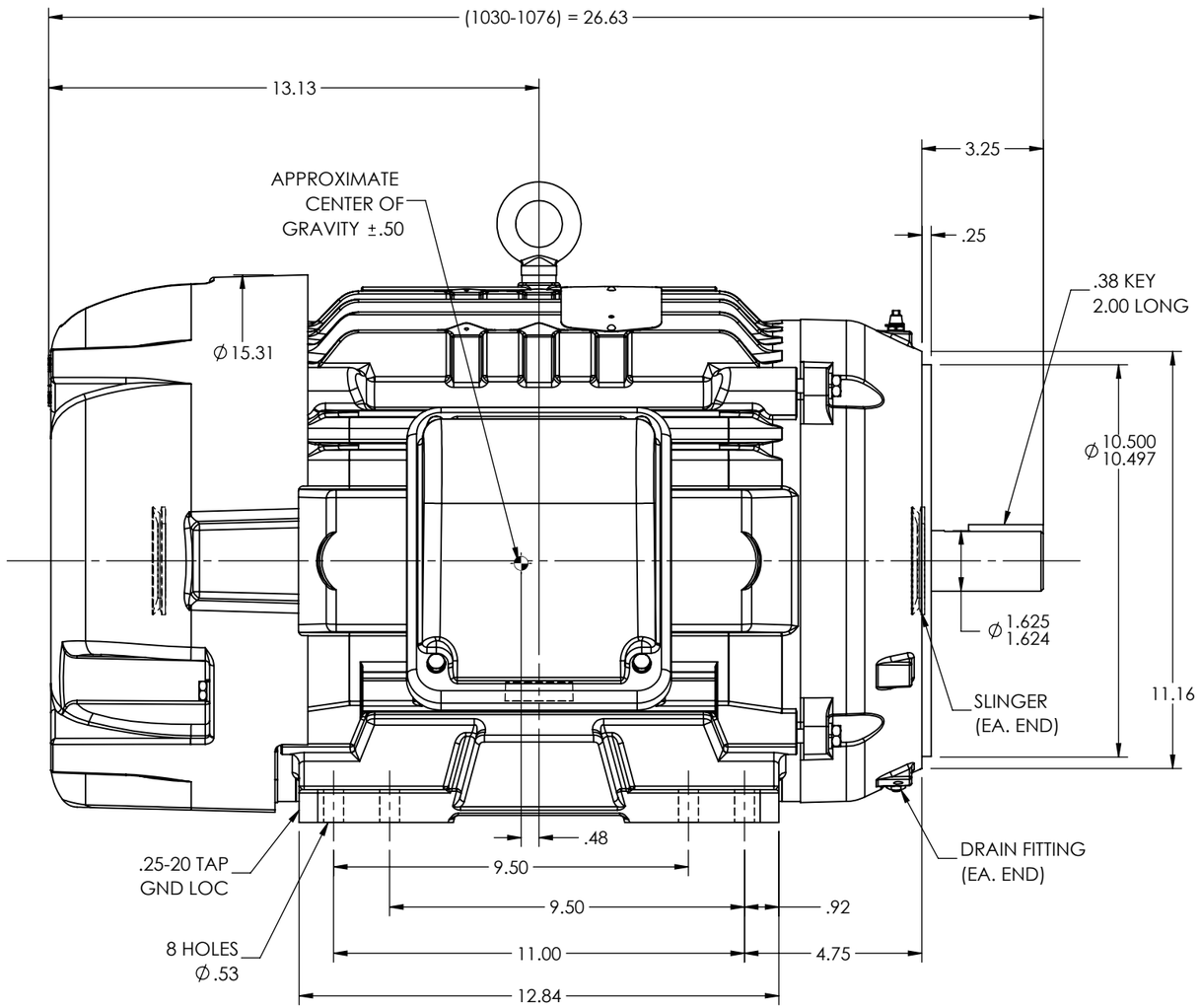

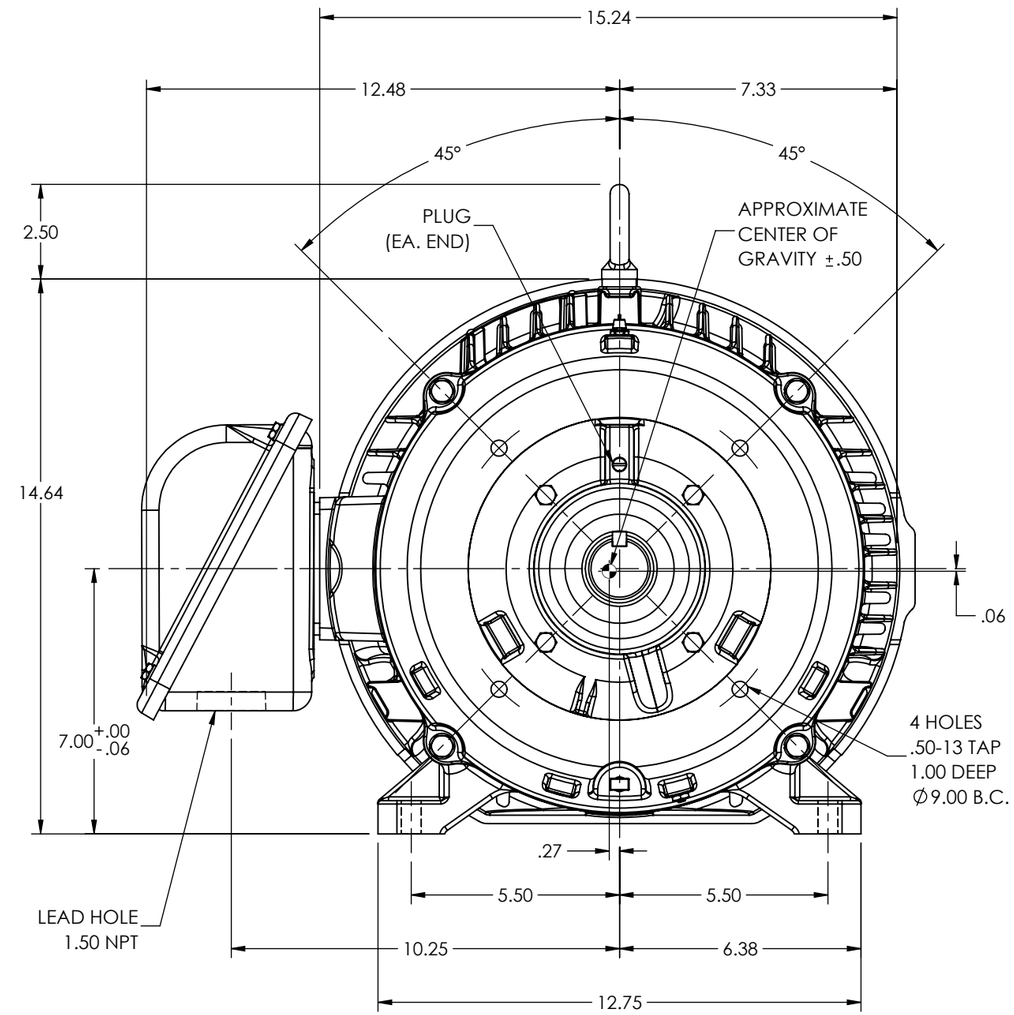

CUSTOMER IS RESPONSIBLE FOR DETERMINING THAT THE PRODUCT WILL PERFORM SUITABLY IN THE INTENDED APPLICATION

REV. DESC: CONVERT FROM AUTOCAD TO SWD			
REV: J	VERSION: 09	REVISED: 01:04:53 10/20/2023	TDR: 000001218940
MODEL NO. 10LYH406			REF: -
BY: USALMAZ			B

BALDOR - RELIANCE®

HORZ TEFC 284-6TSC ECP W/311 BRGS & PLS

10LYH406