ABB BALDOR RELIANCE

Customer information packet

CECP4104T-5

30HP, 1770RPM, 3PH, 60HZ, 286TC, 1060M, TEFC, F
Class - CLI GP A,B,C,D
Division - Division II

Copyright © All product information within this document is subject to ABB Motors and Mechanical Inc. copyright © protection, unless otherwise noted.
11/26/2026 10:18:35 AM

Specifications

Enclosure	TEFC
Frame	286TC
Frame Material	Iron
Frequency	60.00 Hz
Haz Area Class and Group	CLI GP A,B,C,D
Haz Area Division	Division II
Motor Letter Type	Three Phase
Output @ Frequency	30.000 HP @ 60 HZ
Phase	3
Synchronous Speed @ Frequency	1800 RPM @ 60 HZ
Voltage @ Frequency	575.0 V @ 60 HZ
Agency Approvals	CCSA US
	CSA EEV
	NEMA PREMIUM
	NEMA_PREMIUM
	UR
Ambient Temperature	40 °C
Auxiliary Box	NO AUXILLARY BOX
Auxiliary Box Lead Termination	None
Base Indicator	Rigid
Bearing Grease Type	Polyrex EM (-20F +300F)
Blower	None
Constant Torque Speed Range	1.0
Current @ Voltage	28.000 A @ 575.0 V
Design Code	B
Drip Cover	No Drip Cover
Duty Rating	CONT
Efficiency @ 100% Load	93.6 %
Electrically Isolated Bearing	Not Electrically Isolated
Enclosure Modification	Severe Duty Features
Feedback Device	NO FEEDBACK
Front Shaft Indicator	None

Part Detail

Revision	N
Type	AC
Mech. spec.	10H412
Base	
Status	PRD/A
Elec. spec.	10WGZ479
Layout	10LYH412
Eff. date	09-29-2025
CD Diagram	CD0006
Poles	04
Leads	3#10
Proprietary	False
Created date	06-11-2018

Haz Area Temp Code	T3C
Heater Indicator	No Heater
High Voltage Full Load Amps	28.0 a
Insulation Class	F
Inverter Code	Inverter Duty
KVA Code	G
Lifting Lugs	Standard Lifting Lugs
Locked Bearing Indicator	Locked Bearing
Max Speed	2700 rpm
Motor Lead Quantity/Wire Size	3 @ 10 AWG
Motor Lead Termination	Flying Leads
Motor Standards	NEMA
Motor Type	1060M
Mounting Arrangement	F1
Number of Poles	4
Overall Length	28.00 IN
Power Factor	84
Product Family	Super-E Chemical Processing
Pulley End Bearing Type	Ball
Pulley Face Code	C-Face
Pulley Shaft Indicator	Standard
Rodent Screen	None
Service Factor	1.15
Shaft Diameter	1.875 IN
Shaft Ground Indicator	No Shaft Grounding
Shaft Rotation	Reversible
Shaft Slinger Indicator	Shaft Slinger
Speed	1770 rpm
Speed Code	Single Speed
Starting Method	Direct on line
Thermal Device - Bearing	None
Thermal Device - Winding	None
Vibration Sensor Indicator	No Vibration Sensor
Winding Thermal 1	None

Winding Thermal 2	None

Nameplate

NP3241

CAT.NO.	CECP4104T-5			**P/N**				**ENCLOSURE**	TEFC			
SPEC.	10H412Z479G1	**CC**	010A	**FRAME**	286TC			**S/N**				
HP	30			**CLASS**	F	**HZ**	60	**DES**	B			
RPM	1770			**RPM MAX**	2700			**PH**	3	**KVA-CODE**	G	
VOLT	575					**MOTOR WEIGHT**	475					
AMP	28			**SER.F.**	1.15	**PF**	84	**ODE BRG**	6311	**DE BRG**	6311	
RATING	40C AMB-CONT					**NEMA-NOM-EFF**	93.6	**GREASE**	POLYREX EM			
								INV.TYPE	PWM			
TEMP CODE	T3C			**INVERTER-TEMP-CODE**	180							
TEMP =	160	**C HP FR**	60			**C HP TO**	90					
CT HZ FROM	1.0			**CT HZ TO**	60							
HTR-VOLTS		**HTR-AMPS**				**HTR-WATTS**		**MAX. SPACE HEATER TEMP.**		**VT HZ FROM**	O	**VT HZ TO** 60

AC Induction Motor Performance Data
Record # 53760
Typical performance - not guaranteed values

Winding: 10WGZ479-R001	**Type:** 1060M	**Enclosure:** TEFC

Nameplate Data				**575 V, 60 Hz: Single Voltage Motor**	
Rated Output (HP)			30	**Full Load Torque**	88.65 LB-FT
Volts			575	**Start Configuration**	direct on line
Full Load Amps			28	**Breakdown Torque**	267 LB-FT
R.P.M.			1770	**Pull-up Torque**	120 LB-FT
Hz	60	**Phase**	3	**Locked-rotor Torque**	146 LB-FT
NEMA Design Code	B	**KVA Code**	G	**Starting Current**	173 A
Service Factor (S.F.)			1.15	**No-load Current**	10.53 A
NEMA Nom. Eff.	93.6	**Power Factor**	84	**Line-line Res. @ 25ºC**	0.379 Ω
Rating - Duty			40C AMB-CONT	**Temp. Rise @ Rated Load**	63°C
S.F. Amps				**Temp. Rise @ S.F. Load**	77°C
				Locked-rotor Power Factor	30.6
				Rotor inertia	4.77 lb-ft²

Load Characteristics 575 V, 60 Hz, 30 HP

% of Rated Load	**25**	**50**	**75**	**100**	**125**	**150**	**S.F.**
Power Factor	49	72	81	84	86	85	83
Efficiency	91	94	94.3	94	93.6	91.9	93.6
Speed	1793	1786	1779	1772	1763	1753	1770
Line amperes	12.39	16.69	22.06	28.33	35.06	42.67	33.3

ABB Motors and Mechanical Inc.

WINDING # 10WGZ479

30 HP 3 PH 60 HZ 1770 RPM 575 V 1060M

Typical performance - not guaranteed values.

TORQUES(LB-FT): PO=267 PU=120 LR=146 LRA=173

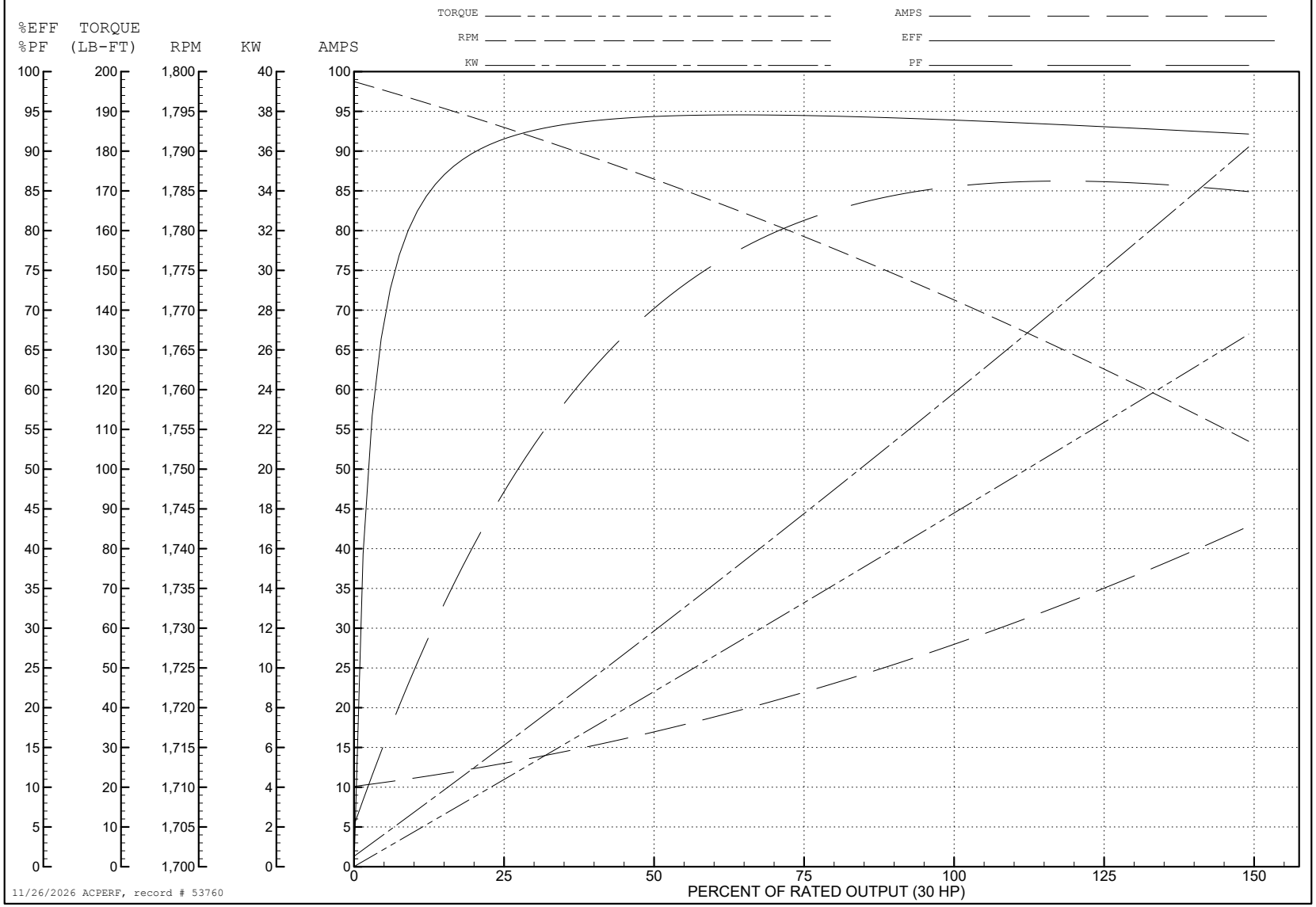

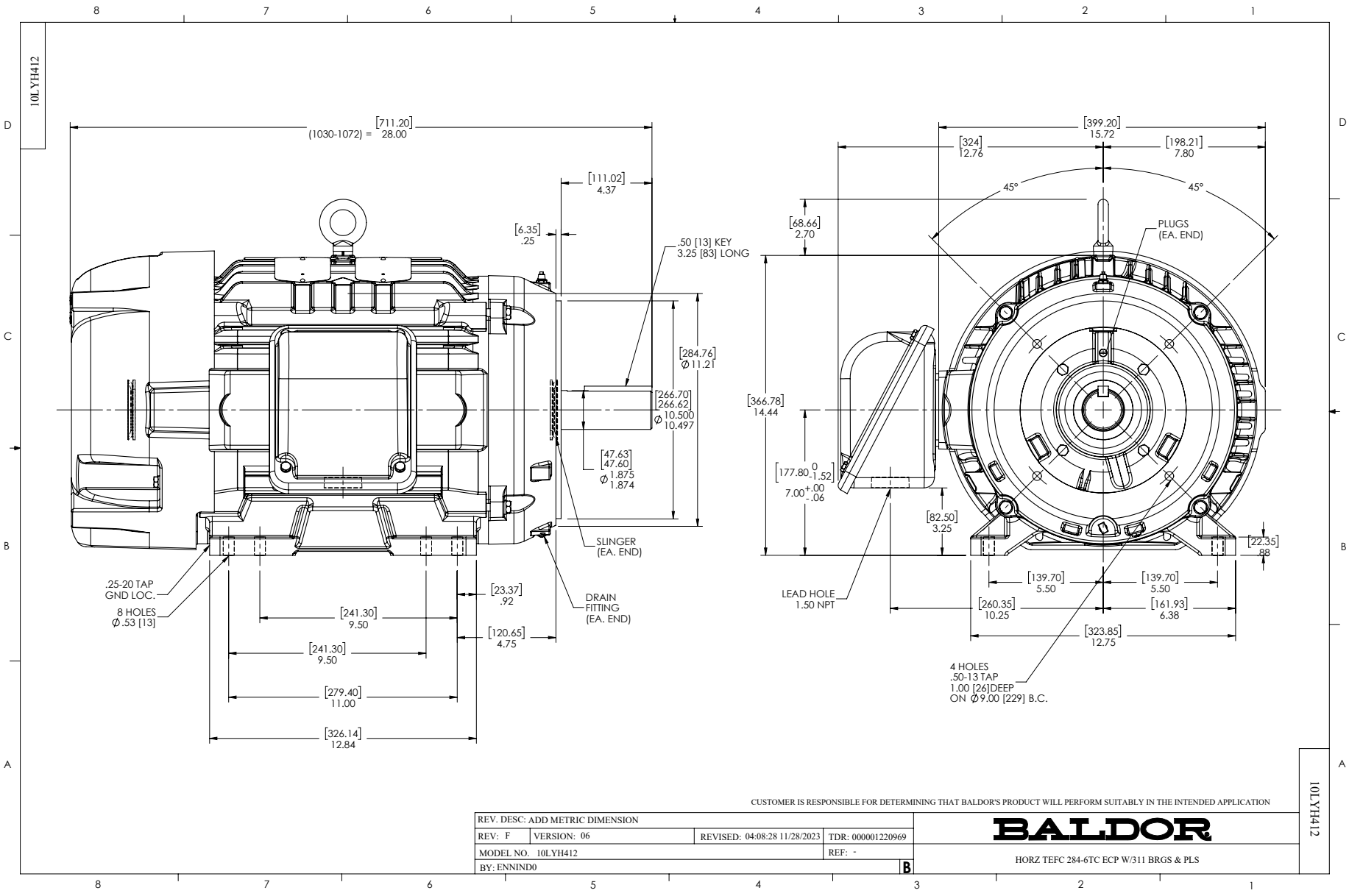
10LYH412
[711.20]
(1030-1072) = 28.00
[111.02]
4.37
[6.35]
.25
.50 [13] KEY
3.25 [83] LONG
[284.76]
Ø11.21
[266.70]
266.62
Ø10.500
10.497
[47.63]
47.60
Ø1.875
1.874
SLINGER
(EA. END)
.25-20 TAP
GND LOC.
8 HOLES
Ø.53 [13]
[241.30]
9.50
[241.30]
9.50
[279.40]
11.00
[326.14]
12.84
[23.37]
.92
[120.65]
4.75
DRAIN
FITTING
(EA. END)
[399.20]
15.72
[324]
12.76
[198.21]
7.80
45°
45°
[68.66]
2.70
PLUGS
(EA. END)
[366.78]
14.44
[177.80 0 -1.52]
7.00 +.00 -.06
[82.50]
3.25
[22.35]
.88
LEAD HOLE
1.50 NPT
[139.70]
5.50
[139.70]
5.50
[260.35]
10.25
[161.93]
6.38
[323.85]
12.75
4 HOLES
.50-13 TAP
1.00 [26]DEEP
ON Ø9.00 [229] B.C.
CUSTOMER IS RESPONSIBLE FOR DETERMINING THAT BALDOR'S PRODUCT WILL PERFORM SUITABLY IN THE INTENDED APPLICATION
REV. DESC: ADD METRIC DIMENSION
REV: F
VERSION: 06
REVISED: 04:08:28 11/28/2023
TDR: 000001220969
MODEL NO. 10LYH412
REF: -
BY: ENNIND0
B
BALDOR
HORZ TEFC 284-6TC ECP W/311 BRGS & PLS
10LYH412

CD0006

TYPICAL WYE–CONNECTED MOTOR

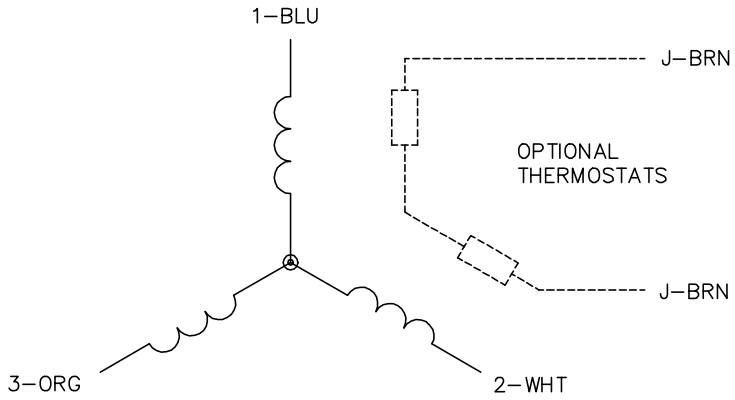

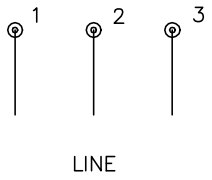

TYPICAL DELTA–CONNECTED MOTOR

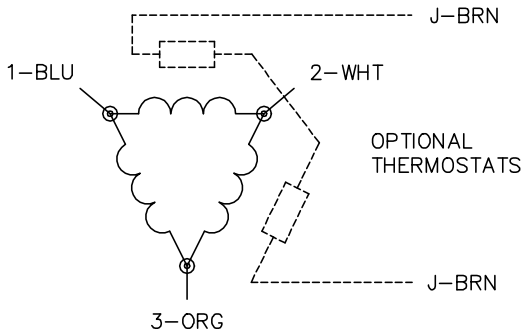

NOTES:

1. THREE LEAD MOTOR MAY BE EITHER WYE CONNECTED OR DELTA CONNECTED.
2. INTERCHANGE ANY TWO LINE LEADS TO REVERSE ROTATION.
3. OPTIONAL THERMOSTATS ARE PROVIDED WHEN SPECIFIED.
4. ACTUAL NUMBER OF INTERNAL PARALLEL CIRCUITS MAY VARY.
5. LEAD COLORS ARE OPTIONAL. LEADS MUST BE NUMBERED AS SHOWN.

CD0006

REV. DESC: ADD CLASS CONN00000007		
REV. LTR: E	VERSION: 01	TDR: 000001099922
FILE: \AAA\00005\141	REVISED: 10:24:49 02/19/2019	BY: ENBRIR0
MTL: –		

BALDOR - RELIANCE®

3PH, SV, 3 LEADS, WYE OR DELTA CONNECTED

SH 1 of 1