10LYG898

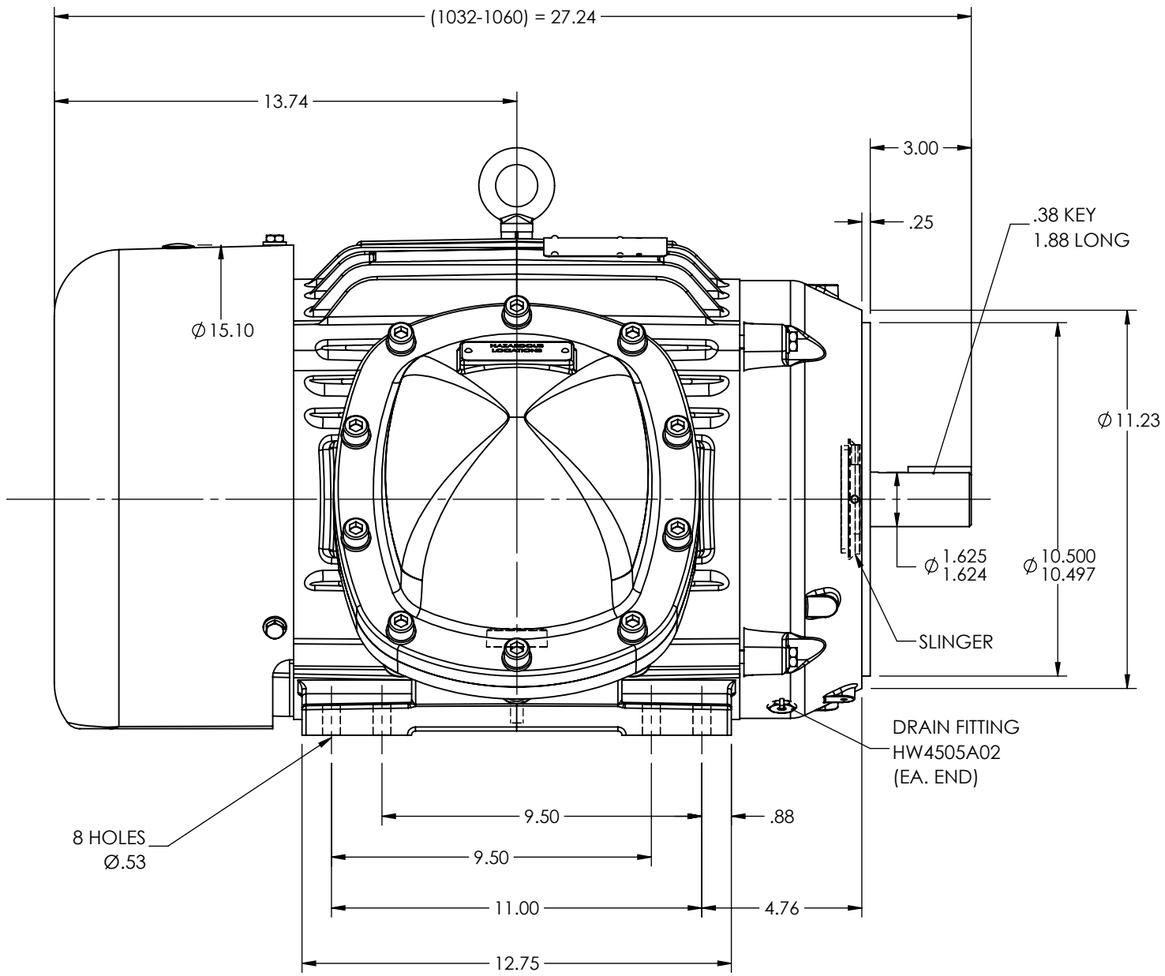

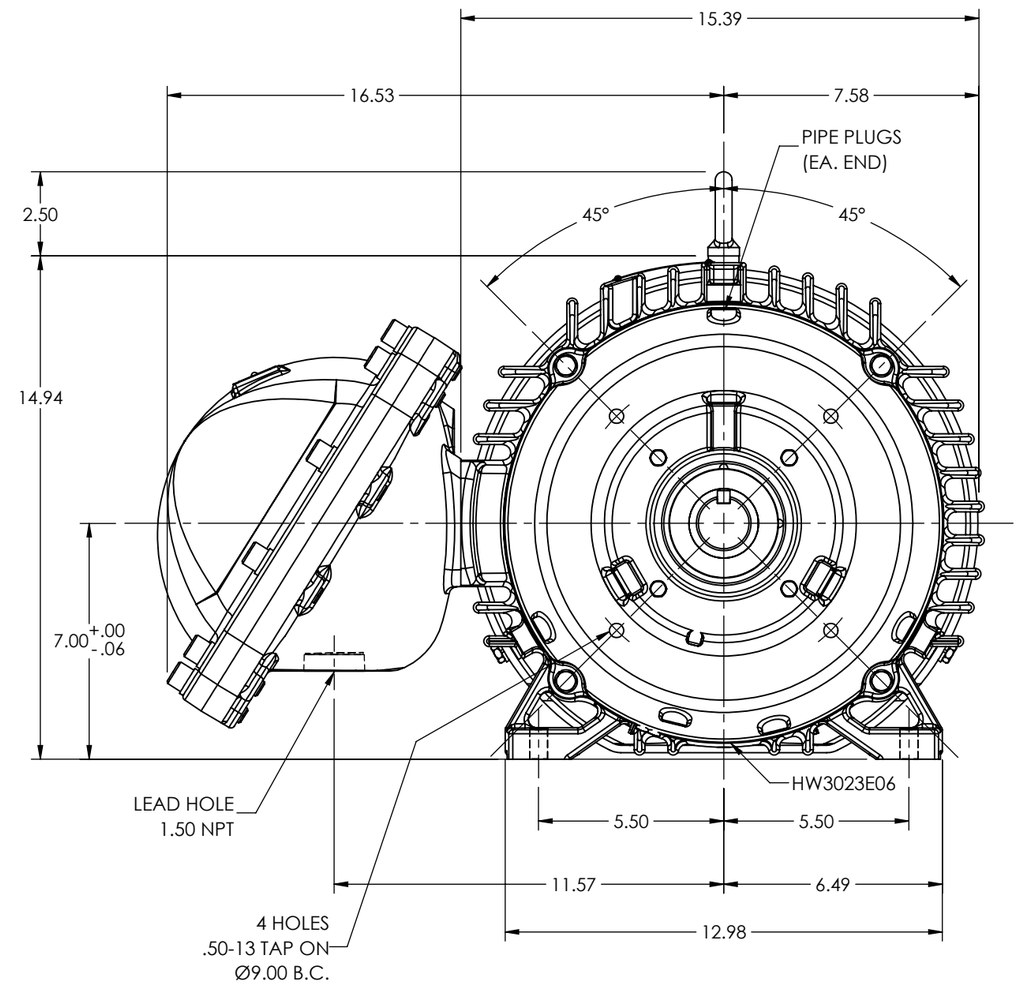

CUSTOMER IS RESPONSIBLE FOR DETERMINING THAT THE PRODUCT WILL PERFORM SUITABLY IN THE INTENDED APPLICATION

REV. DESC: LOAD MARKING FILE FOR STOCK PRODUCTS			
REV: B	VERSION: 02	REVISED: 09:04:34 06/28/2023	TDR: 000001211833
MODEL NO. 10LYG898			REF: -
BY: ENALEM0			B

BALDOR - RELIANCE®

HORZ XPFC 284-6TSC CL.I GP.C&D ONLY, DRILL RIG

10LYG898