09LYF368

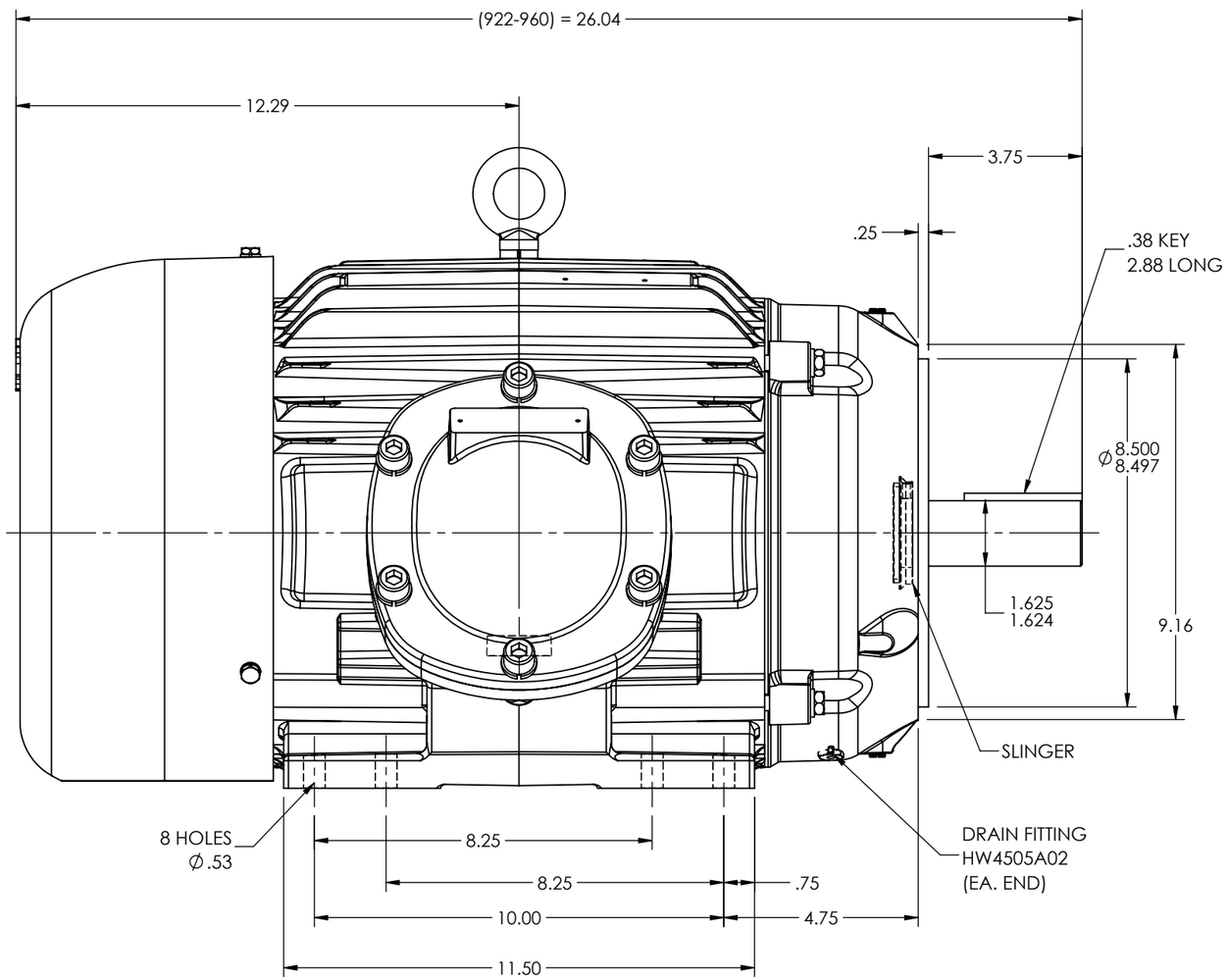


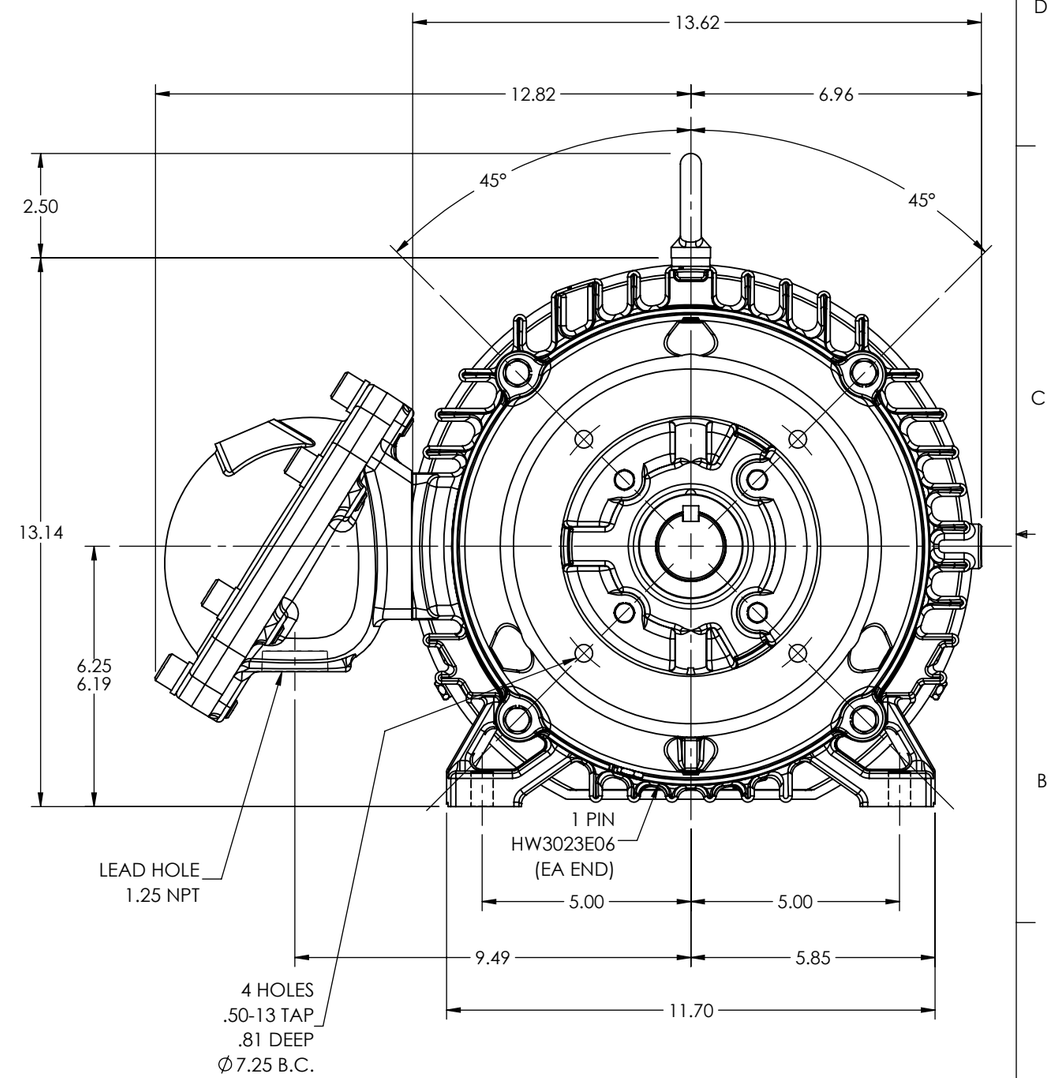


CUSTOMER IS RESPONSIBLE FOR DETERMINING THAT THE PRODUCT WILL PERFORM SUITABLY IN THE INTENDED APPLICATION

| | | | |
|---|---|---|---|
| REV. DESC: CONVERT AUTOCAD DRW TO SWD | | | |
| REV: G | VERSION: 06 | REVISED: 12:03:07 05/23/2023 | TDR: 000001208005 |
| MODEL NO. 09LYF368 | | | REF: - |
| BY: ENALEM0 | | | B |

BALDOR - RELIANCE®

HORZ XPFC 254-6TC CL.I GRP.C&D ONLY DRILL RIG

09LYF368