ABB BALDOR RELIANCE

Customer information packet

CDPX3416

.33HP, 1750RPM, DC, 56C, X3420P, XPFC, F1
Class - CLI GP D; CLII GP F,G
Division -

Copyright © All product information within this document is subject to ABB Motors and Mechanical Inc. copyright © protection, unless otherwise noted.
11/26/2026 3:29:02 AM

Specifications

Armature Voltage	180 V
Base Speed	1750 rpm
Enclosure	XPFC
Frame	56C
Frame Material	Steel
Haz Area Class and Group	CLI GP D; CLII GP F,G
Output Power	0.330 HP
Agency Approvals	CSA
	UL
	UR
Ambient Temperature	40 °C
Armature Current	1.7 a
Armature Inertia	7.804 lb-ft2
Base Indicator	Rigid
Bearing Grease Type	Polyrex EM (-20F +300F)
Drip Cover	No Drip Cover
Duty Rating	CONT
Feedback Device	NO FEEDBACK
Haz Area Temp Code	T3C
Heater Indicator	No Heater
Lifting Lugs	No Lifting Lugs
Motor Lead Exit	Ko Box
Motor Lead Quantity/Wire Size	2 @ 14 AWG, A
Motor Lead Termination	Flying Leads
Motor Standards	NEMA
Mounting Arrangement	F1
Overall Length	14.87 IN
Product Family	General Purpose
Pulley End Bearing Type	Sealed Bearing
Service Factor	1.00
Shaft Diameter	0.625 IN
Shaft Extension Location	Pulley End

Part Detail

Revision	Z
Type	DC
Mech. spec.	34-6519
Base	
Status	PRD/A
Elec. spec.	34WG3950
Layout	34LY6519
Eff. date	06-15-2023
CD Diagram	CD0194
Poles	00
Leads	2#14 A,2#18 JJ Y
Proprietary	False
Created date	01-01-0001

Shaft Ground Indicator	No Shaft Grounding
Shaft Rotation	Reversible
Shaft Slinger Indicator	No Slinger

Nameplate

NP0727XPSL					
NO.					
SER.					
SPEC.	34-6519-3950G1				
CAT.NO.	CDPX3416		**T. CODE**		T3C
HP	.33		**ENCL**	XPFC	
RPM	1750				
FRAME	56C	**TYPE**	3420P		
ARM V	180		**ARM A**	1.7	
FLD V			**FLD A**		
INSUL	F	**AMB.**	40		
DUTY	CONT	**SUPPLY**	1.5		
BRG/DE	6203	**BRG/ODE**	6203		
BRUSHES	2/BP5011CV01				
BLANK					

DC Motor Performance Data
Record # 1434
Typical performance - not guaranteed values

Winding: 34WG3950-R007	**Type:** 3420P	**Enclosure:** XPFC

Nameplate Data	
Rated Output (HP)	0.33
R.P.M.	1750
Armature Volts	180
Armature Amps	1.7
Field Volts	
Field Amps	
Rating - Duty	40C AMB-CONT
Form Factor	1.5

General Characteristics	
Armature Resistance @ 25ºC	5.12 Ω
Armature Inductance	43.61 mH

Load Characteristics at 180 Armature Volts

Load Point	**1**	**2**	**3**	**4**	**5**	**6**	**7**
Armature Amps	0.1	1.2	1.7	2.3	2.8	3.4	4.6
R.P.M.	1872	1791	1752	1707	1670	1632	1552
Torque (LB-FT)	0	0.75	1.125	1.5	1.875	2.25	3

ABB Motors and Mechanical Inc.

WINDING # 34WG3950

0.33 HP DC 1750 RPM 180 V 3420P

Typical performance - not guaranteed values.

ENCL: XPFC DUTY: CONT CL: F

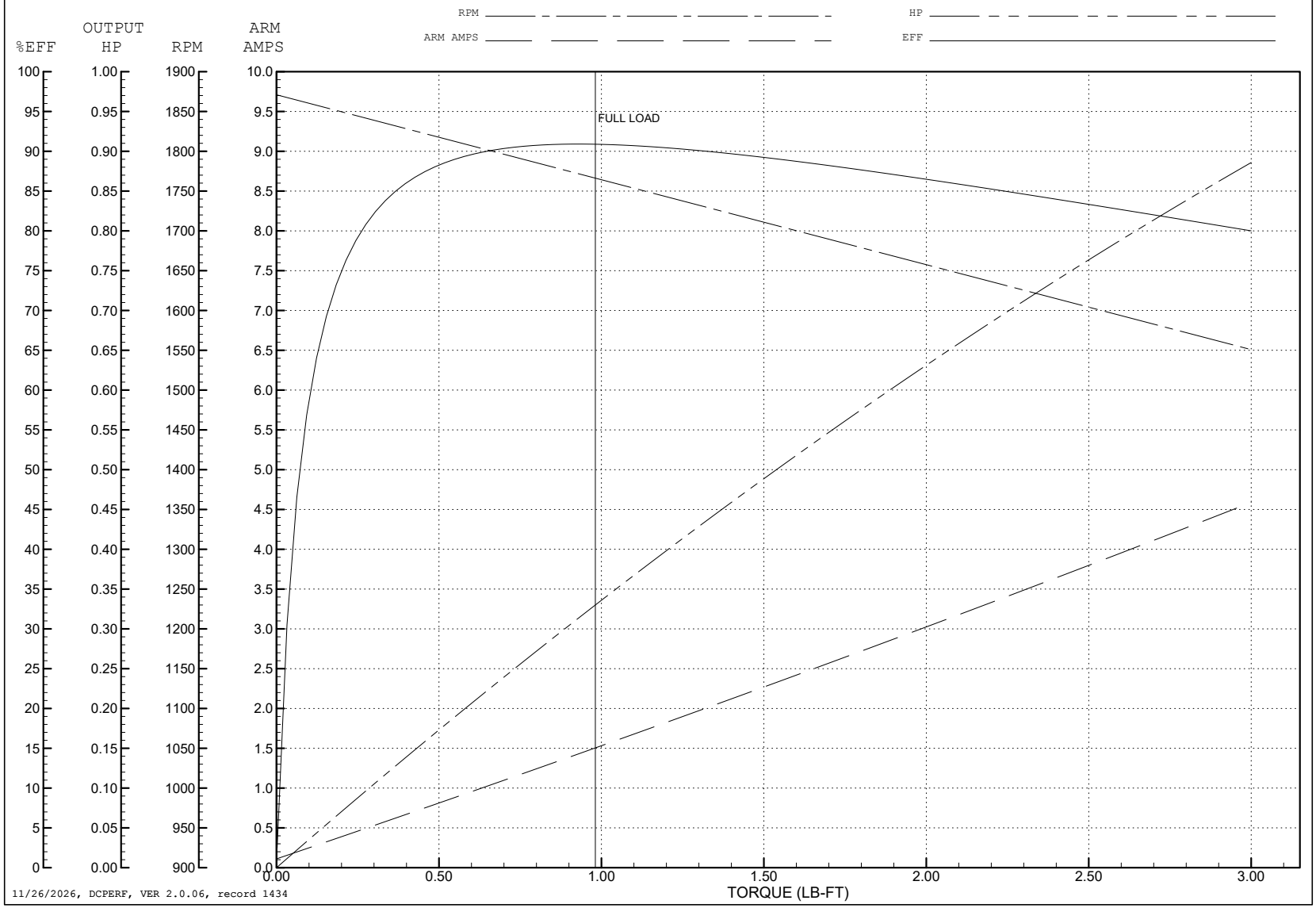

11/26/2026, DCPERF, VER 2.0.06, record 1434

34LY6519

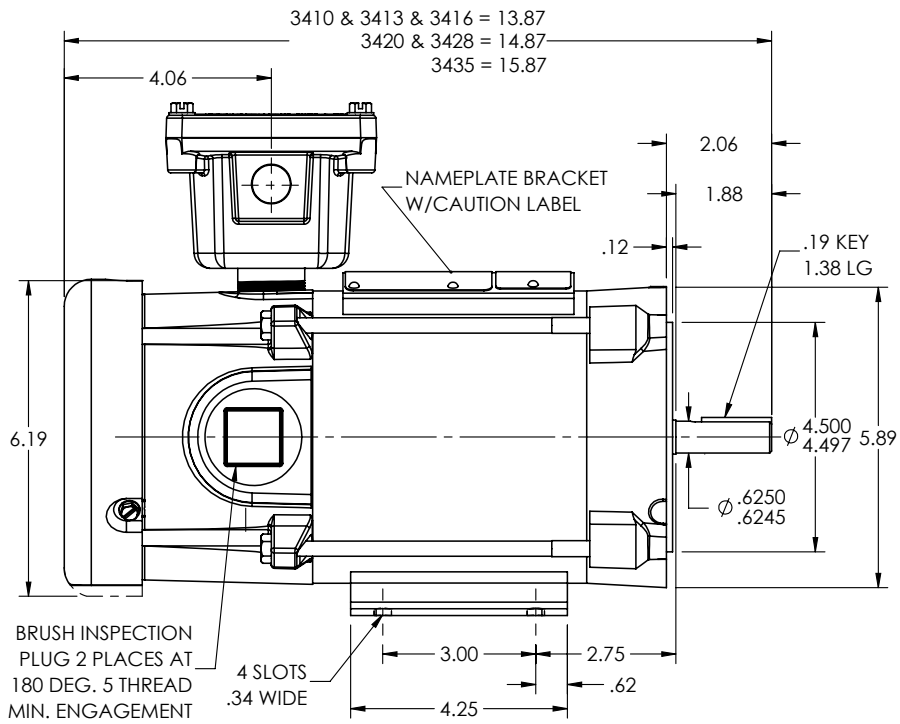

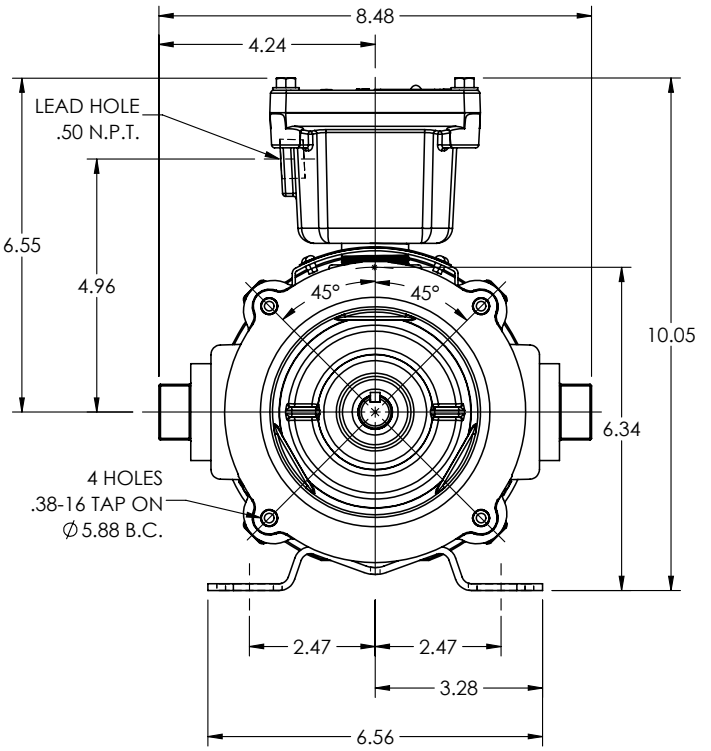

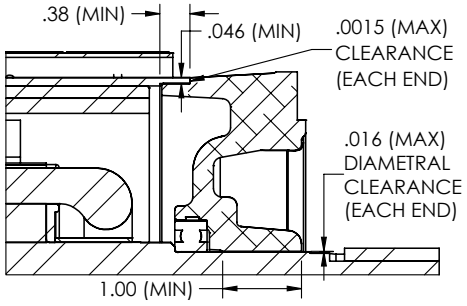

PULLEY END DETAIL

CUSTOMER IS RESPONSIBLE FOR DETERMINING THAT THE PRODUCT WILL PERFORM SUITABLY IN THE INTENDED APPLICATION

REV. DESC: LOAD TO SOLIDWORKS - REV H			
REV: J	VERSION: 05	REVISED: 11:19:58 12/16/2022	TDR: 000001201165
34LY6519	MODEL NO. 34LY6519		REF: -
	BY: ENFRAJ0		

BALDOR - RELIANCE®

HORZ X34PM 56C XPFC CL-I GP-D, CL-II GP-F&G, .50 NPT LEAD

34LY6519

CD0194

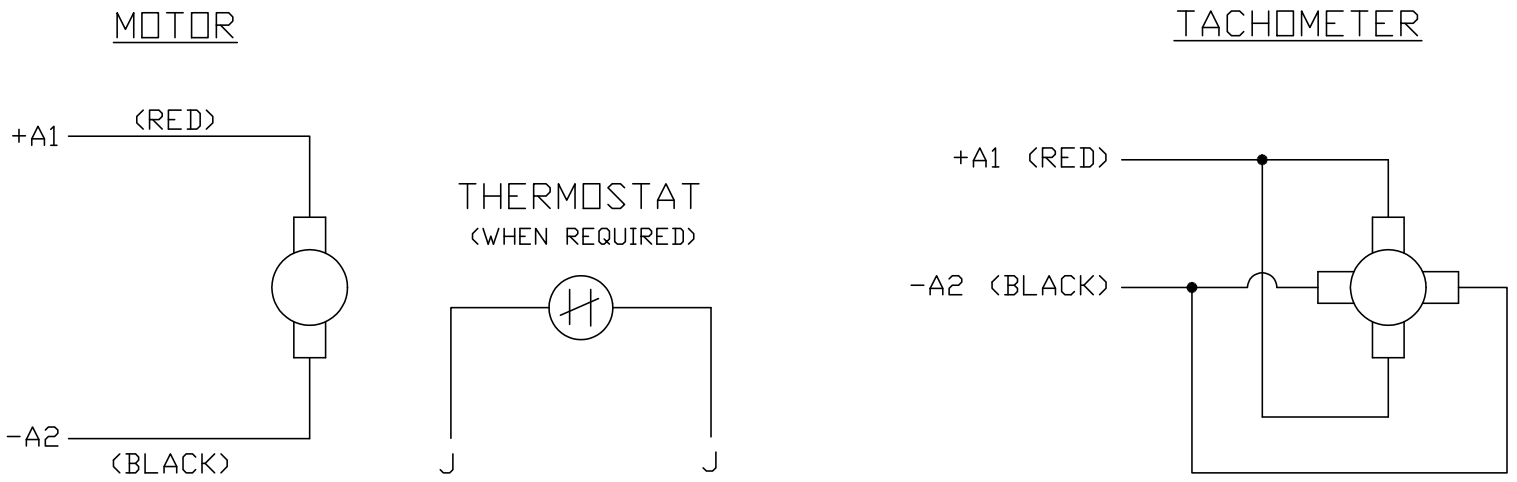

NOTES:

1. CCW ROTATION AS SHOWN FACING COMMUTATOR END. TO REVERSE MOTOR ROTATION OR TACHOMETER OUTPUT POLARITY INTERCHANGE LEADS A1(RED) & A2(BLACK)

2. LEAD COLORS FOR REFERENCE ONLY & NOT SPECIFIED BY THIS DRAWING. LEAD COLORS SPECIFIED BY LAYOUT DRAWING & BILL OF MATERIAL ONLY.

CD0194

MATL: –				BALDOR ELECTRIC Co.
REV: E	ADDED NOTE "LEAD COLORS FOR REFERENCE ONLY &....			
CD0194	SCALE: –	BY: CK	REVISED: 07/28/95	CD TYPE P DC PERMANENT MAGNET MOTORS AND TACHOMETERS
	FILE: AAA00004503		TDR: 0078737	