ABB BALDOR RELIANCE

Customer information packet

CDPWD3310

.25HP, 1750RPM, DC, 56C, 3320P, TENV, F1

Copyright © All product information within this document is subject to ABB Motors and Mechanical Inc. copyright © protection, unless otherwise noted.
11/26/2026 6:27:33 PM

Specifications

Armature Voltage	90 V
Base Speed	1750 rpm
Enclosure	TENV
Frame	56C
Frame Material	Steel
Output Power	0.250 HP
Agency Approvals	CE
	CSA
	UR
Ambient Temperature	40 °C
Armature Current	2.5 a
Armature Inertia	7.804 lb-ft2
Base Indicator	Rigid
Bearing Grease Type	Polyrex EM (-20F +300F)
Drip Cover	No Drip Cover
Duty Rating	CONT
Feedback Device	NO FEEDBACK
Heater Indicator	No Heater
Lifting Lugs	No Lifting Lugs
Motor Lead Exit	Ko Box
Motor Lead Quantity/Wire Size	2 @ 18 AWG, A
Motor Lead Termination	Flying Leads
Motor Standards	NEMA
Mounting Arrangement	F1
Overall Length	12.25 IN
Product Family	Wash Down
Pulley End Bearing Type	Sealed Bearing
Service Factor	1.00
Shaft Diameter	0.625 IN
Shaft Extension Location	Pulley End
Shaft Ground Indicator	No Shaft Grounding
Shaft Rotation	Reversible

Part Detail

Revision	AM
Type	DC
Mech. spec.	33-2142
Base	
Status	PRD/A
Elec. spec.	33WGZ118
Layout	33LY2142
Eff. date	08-20-2024
CD Diagram	CD0194
Poles	00
Leads	2#18 A CD0194 Y
Proprietary	False
Created date	01-01-0001

Shaft Slinger Indicator Shaft Slinger

Nameplate

NP1509					
CAT.NO.	CDPWD3310				
SPEC.	33-2142Z118				
HP	.25	**ENCL**	TENV		
RPM	1750 1/MIN				
FRAME	56C	**TYPE**	3320P		
ARM V	90	**ARM A**	2.5		
FLD V		**FLD A**			
INSUL	F	**AMB.**	40		
DUTY	S1 CONT	**SUPPLY**	1.3		
BRG/DE	6203	**BRG/ODE**	6203		
BRUSHES	2/BP5011T01				
	IP55	**BLANK**			
SER.					
BLANK	KW.18 KG10 IC410				
APRV-CSA	Y	**APRV-UL**	Y	**APRV-CE**	Y

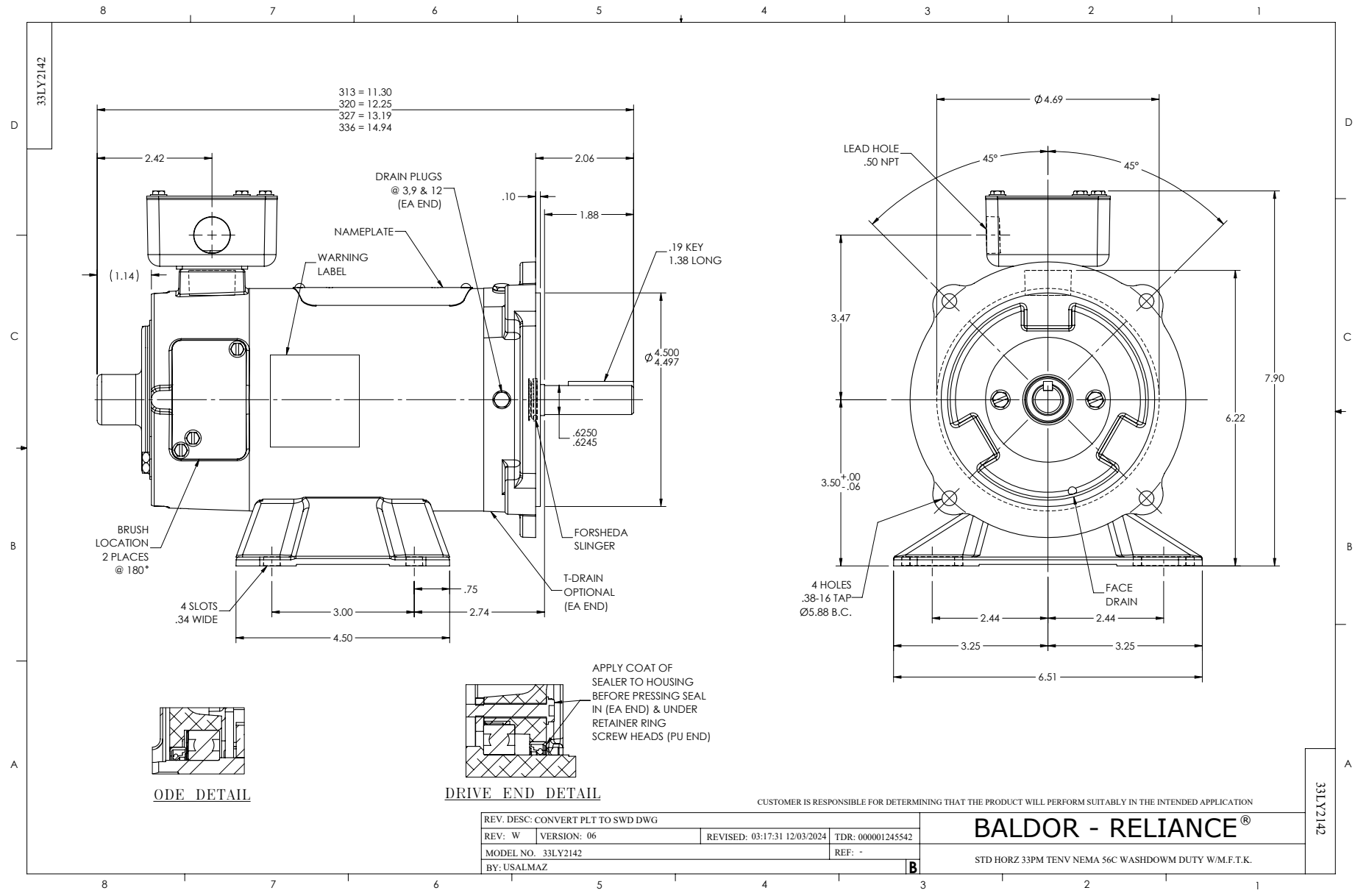
33LY2142
313 = 11.30
320 = 12.25
327 = 13.19
336 = 14.94
2.42
2.06
.10
1.88
DRAIN PLUGS
@ 3,9 & 12
(EA END)
NAMEPLATE
WARNING
LABEL
(1.14)
.19 KEY
1.38 LONG
Ø 4.500
4.497
.6250
.6245
BRUSH
LOCATION
2 PLACES
@ 180°
FORSHEDA
SLINGER
T-DRAIN
OPTIONAL
(EA END)
4 SLOTS
.34 WIDE
.75
3.00
2.74
4.50
Ø 4.69
LEAD HOLE
.50 NPT
45°
45°
3.47
7.90
6.22
3.50 +.00 -.06
4 HOLES
.38-16 TAP
Ø5.88 B.C.
FACE
DRAIN
2.44
2.44
3.25
3.25
6.51
APPLY COAT OF
SEALER TO HOUSING
BEFORE PRESSING SEAL
IN (EA END) & UNDER
RETAINER RING
SCREW HEADS (PU END)
ODE DETAIL
DRIVE END DETAIL
CUSTOMER IS RESPONSIBLE FOR DETERMINING THAT THE PRODUCT WILL PERFORM SUITABLY IN THE INTENDED APPLICATION
REV. DESC: CONVERT PLT TO SWD DWG
REV: W
VERSION: 06
REVISED: 03:17:31 12/03/2024
TDR: 000001245542
MODEL NO. 33LY2142
REF: -
BY: USALMAZ
B
BALDOR - RELIANCE®
STD HORZ 33PM TENV NEMA 56C WASHDOWM DUTY W/M.F.T.K.
33LY2142

CD0194

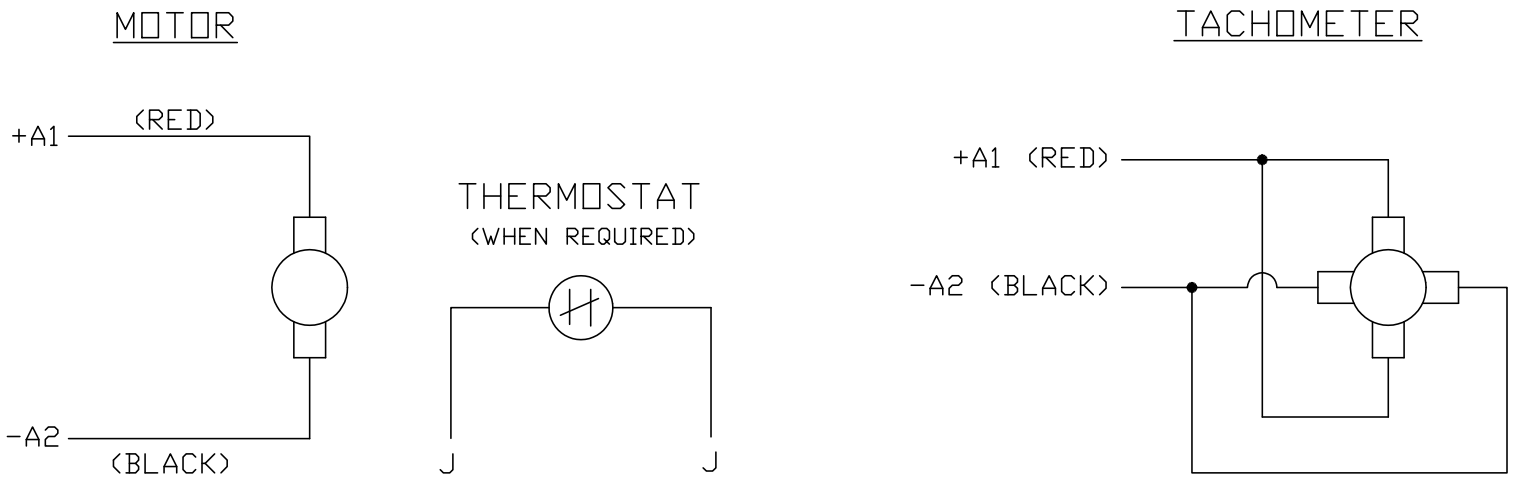

NOTES:

1. CCW ROTATION AS SHOWN FACING COMMUTATOR END. TO REVERSE MOTOR ROTATION OR TACHOMETER OUTPUT POLARITY INTERCHANGE LEADS A1(RED) & A2(BLACK)

2. LEAD COLORS FOR REFERENCE ONLY & NOT SPECIFIED BY THIS DRAWING. LEAD COLORS SPECIFIED BY LAYOUT DRAWING & BILL OF MATERIAL ONLY.

CD0194

MATL: –				BALDOR ELECTRIC Co.
REV: E	ADDED NOTE "LEAD COLORS FOR REFERENCE ONLY &....			
CD0194	SCALE: –	BY: CK	REVISED: 07/28/95	CD TYPE P DC PERMANENT MAGNET MOTORS AND TACHOMETERS
	FILE: AAA00004503		TDR: 0078737	