Customer information packet

CDP3580

1.5HP, 2500RPM, DC, 145TC, 3524P, TEFC, F1
Class - None
Division -

Copyright © All product information within this document is subject to ABB Motors and Mechanical Inc. copyright © protection, unless otherwise noted.
11/26/2026 5:47:45 AM

Specifications

Armature Voltage	180 V
Base Speed	2500 rpm
Enclosure	TEFC
Frame	145TC
Frame Material	Steel
Haz Area Class and Group	None
Output Power	1.500 HP
Agency Approvals	CE
	CSA
	UR
Ambient Temperature	40 °C
Armature Current	7.0 a
Armature Inertia	20.228 lb-ft2
Base Indicator	Rigid
Bearing Grease Type	Polyrex EM (-20F +300F)
Drip Cover	No Drip Cover
Duty Rating	CONT
Feedback Device	NO FEEDBACK
Heater Indicator	No Heater
Lifting Lugs	No Lifting Lugs
Motor Lead Exit	Ko Box
Motor Lead Quantity/Wire Size	2 @ 14 AWG
Motor Lead Termination	Flying Leads
Motor Standards	NEMA
Mounting Arrangement	F1
Overall Length	14.50 IN
Product Family	General Purpose
Pulley End Bearing Type	Sealed Bearing
Service Factor	1.00
Shaft Diameter	0.875 IN
Shaft Extension Location	Pulley End
Shaft Ground Indicator	No Shaft Grounding

Part Detail

Revision	X
Type	DC
Mech. spec.	35P432
Base	
Status	PRD/A
Elec. spec.	35WGZ183
Layout	35LYP432
Eff. date	09-02-2026
CD Diagram	CD0194
Poles	00
Leads	
Proprietary	False
Created date	01-01-0001

Shaft Rotation	Reversible
Shaft Slinger Indicator	No Slinger

Nameplate

NP0891L							
CAT.NO.	CDP3580						
SPEC.	35P432Z183						
HP	1.5/KW1.1		**ENCL**	TEFC			
RPM	2500 1/MIN						
FRAME	145TC		**TYPE**	3524P			
ARM V	180		**ARM A**	7			
FLD V			**FLD A**				
INSUL	F		**AMB.**	40			
DUTY	CONT			**SUPPLY**	K		
BRG/DE	6205			**BRG/ODE**	6205		
BRUSHES	2/BP5000T15						
				BLANK	IP44		
SER.							
BLANK	IC411 KG28						
APRV-CE	Y	**APRV-CSA**	Y		**APRV-UL**	Y	

Accessories

Part number	Description	Multiplier
TK3500	TACHO MOUTING KIT TK3500	A8

DC Motor Performance Data
Record # 355
Typical performance - not guaranteed values

Winding: 35WGZ183-R003	**Type:** 3524P	**Enclosure:** TEFC

Nameplate Data	
Rated Output (HP)	1.5
R.P.M.	2500
Armature Volts	180
Armature Amps	7
Field Volts	
Field Amps	
Rating - Duty	40C AMB-CONT
Power Supply Code	K

General Characteristics	
Armature Resistance @ 25ºC	1.04 Ω
Armature Inductance	12.01 mH

Load Characteristics at 180 Armature Volts

Load Point	**1**	**2**	**3**	**4**	**5**	**6**	**7**
Armature Amps	0.4	1.7	3.2	5	6.4	7.9	9.4
R.P.M.	2485	2445	2407	2378	2345	2305	2264
Torque (LB-FT)	0	0.75	1.5	2.375	3.125	3.875	4.625

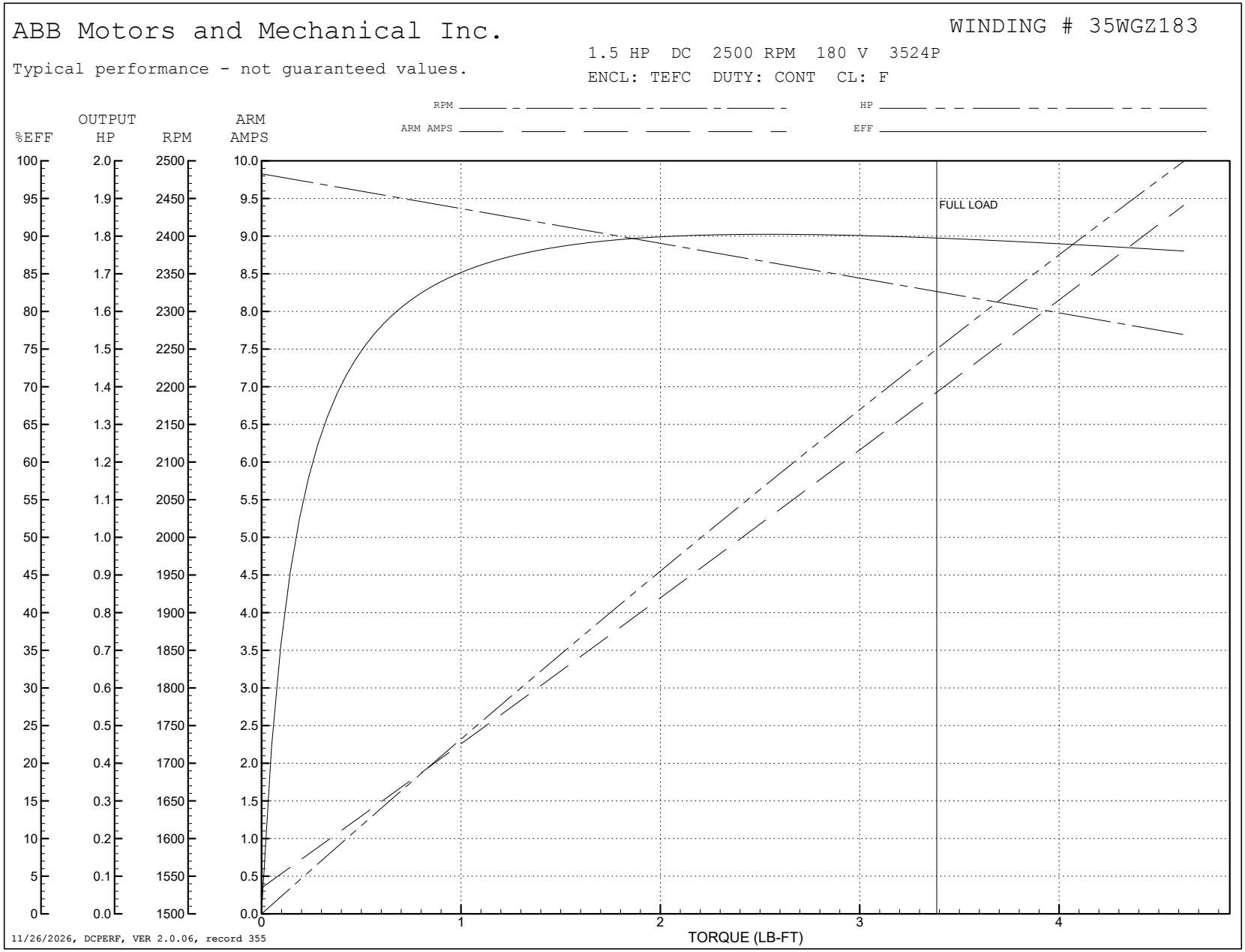
ABB Motors and Mechanical Inc.
WINDING # 35WGZ183
Typical performance - not guaranteed values.
1.5 HP DC 2500 RPM 180 V 3524P
ENCL: TEFC DUTY: CONT CL: F
RPM
ARM AMPS
HP
EFF
%EFF
OUTPUT HP
RPM
ARM AMPS
FULL LOAD
TORQUE (LB-FT)
11/26/2026, DCPERF, VER 2.0.06, record 355

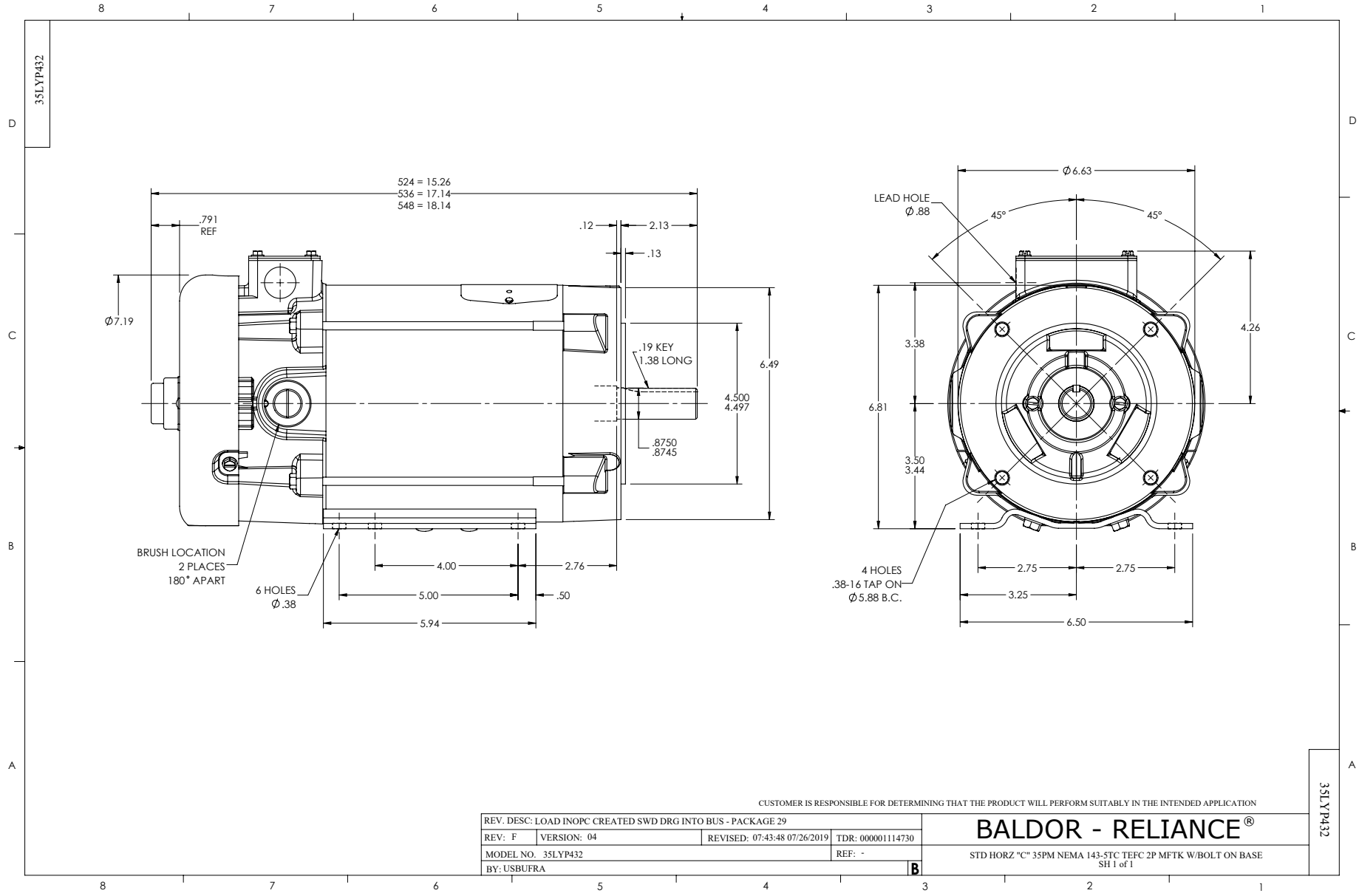
35LYP432
524 = 15.26
536 = 17.14
548 = 18.14
.791
REF
.12
2.13
.13
Ø7.19
.19 KEY
1.38 LONG
6.49
4.500
4.497
.8750
.8745
BRUSH LOCATION
2 PLACES
180° APART
6 HOLES
Ø.38
4.00
2.76
5.00
.50
5.94
Ø6.63
LEAD HOLE
Ø.88
45°
45°
4.26
3.38
6.81
3.50
3.44
4 HOLES
.38-16 TAP ON
Ø5.88 B.C.
2.75
2.75
3.25
6.50
CUSTOMER IS RESPONSIBLE FOR DETERMINING THAT THE PRODUCT WILL PERFORM SUITABLY IN THE INTENDED APPLICATION
REV. DESC: LOAD INOPC CREATED SWD DRG INTO BUS - PACKAGE 29
REV: F
VERSION: 04
REVISED: 07:43:48 07/26/2019
TDR: 000001114730
MODEL NO. 35LYP432
REF: -
BY: USBUFRA
B
BALDOR - RELIANCE®
STD HORZ "C" 35PM NEMA 143-5TC TEFC 2P MFTK W/BOLT ON BASE
SH 1 of 1
35LYP432

CD0194

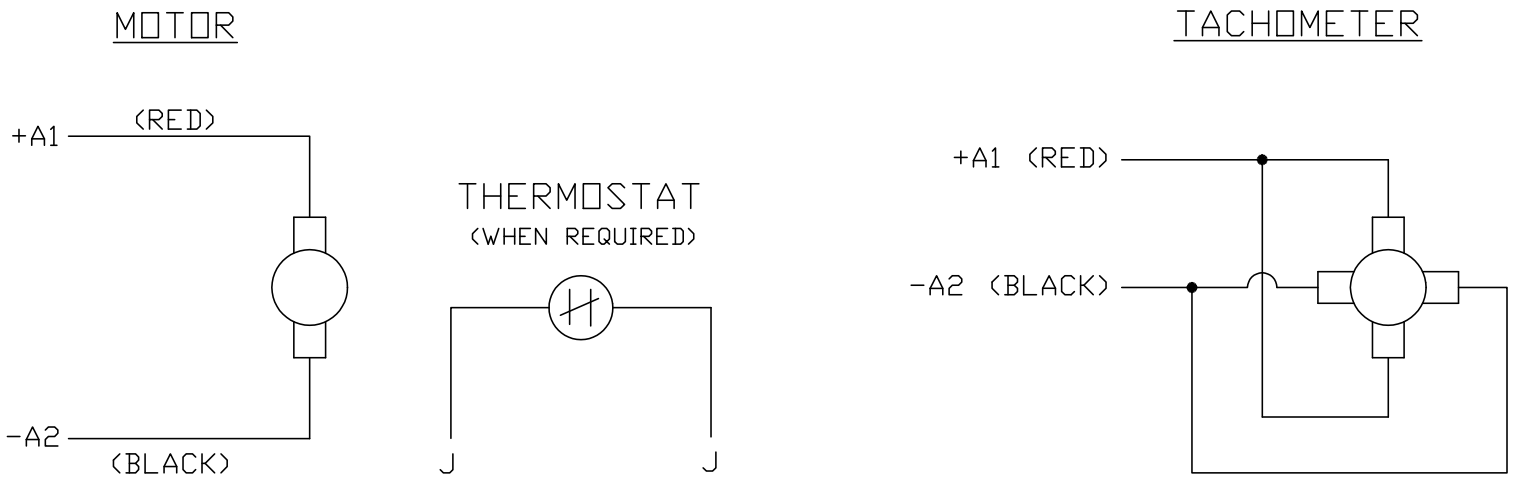

NOTES:

1. CCW ROTATION AS SHOWN FACING COMMUTATOR END. TO REVERSE MOTOR ROTATION OR TACHOMETER OUTPUT POLARITY INTERCHANGE LEADS A1(RED) & A2(BLACK)

2. LEAD COLORS FOR REFERENCE ONLY & NOT SPECIFIED BY THIS DRAWING. LEAD COLORS SPECIFIED BY LAYOUT DRAWING & BILL OF MATERIAL ONLY.

CD0194

MATL: –				BALDOR ELECTRIC Co.
REV: E	ADDED NOTE "LEAD COLORS FOR REFERENCE ONLY &....			
CD0194	SCALE: –	BY: CK	REVISED: 07/28/95	CD TYPE P DC PERMANENT MAGNET MOTORS AND TACHOMETERS
	FILE: AAA00004503		TDR: 0078737	