ABB BALDOR RELIANCE

Customer information packet

CDP3455

1HP, 1750RPM, DC, 56C, 3435P, TEFC, F1, N
Class - None
Division -

Copyright © All product information within this document is subject to ABB Motors and Mechanical Inc. copyright © protection, unless otherwise noted.
11/23/2026 2:47:35 AM

Specifications

Armature Voltage	180 V
Base Speed	1750 rpm
Enclosure	TEFC
Frame	56C
Frame Material	Steel
Haz Area Class and Group	None
Output Power	1.000 HP
Agency Approvals	CE
	CSA
	UR
Ambient Temperature	40 °C
Armature Current	5.0 a
Armature Inertia	13.657 lb-ft2
Base Indicator	Rigid
Bearing Grease Type	Polyrex EM (-20F +300F)
Drip Cover	No Drip Cover
Duty Rating	CONT
Feedback Device	NO FEEDBACK
Heater Indicator	No Heater
Lifting Lugs	No Lifting Lugs
Motor Lead Exit	Ko Box
Motor Lead Quantity/Wire Size	2 @ 14 AWG
Motor Lead Termination	Flying Leads
Motor Standards	NEMA
Mounting Arrangement	F1
Overall Length	15.46 IN
Product Family	General Purpose
Pulley End Bearing Type	Sealed Bearing
Service Factor	1.00
Shaft Diameter	0.625 IN
Shaft Extension Location	Pulley End
Shaft Ground Indicator	No Shaft Grounding

Part Detail

Revision	AL
Type	DC
Mech. spec.	34-5990
Base	
Status	PRD/A
Elec. spec.	34WG3865
Layout	34LY5990
Eff. date	10-25-2024
CD Diagram	CD0194
Poles	00
Leads	2#14 Y
Proprietary	False
Created date	01-01-0001

Shaft Rotation	Reversible
Shaft Slinger Indicator	No Slinger

Nameplate

NP0891L							
CAT.NO.	CDP3455						
SPEC.	34-5990-3865						
HP	1/.75KW		**ENCL**	TEFC			
RPM	1750 1/MIN IC411						
FRAME	56C		**TYPE**	3435P			
ARM V	180		**ARM A**	5			
FLD V			**FLD A**				
INSUL	F		**AMB.**	40			
DUTY	S1 CONT			**SUPPLY**	1.5		
BRG/DE	6203			**BRG/ODE**	6203		
BRUSHES	2/BP5000AW14						
				BLANK	IP44 20KG		
SER.							
BLANK							
APRV-CE	Y	**APRV-CSA**	Y		**APRV-UL**	Y	

Accessories

Part number	Description	Multiplier
TK3400	TACHO MOUNTING KIT FOR TK3400	A8
TK3400-HPU	HPU10 MOUNTING KIT 34P/35P TEFC	

DC Motor Performance Data
Record # 237
Typical performance - not guaranteed values

Winding: 34WG3865-R001	**Type:** 3435P	**Enclosure:** TEFC

Nameplate Data	
Rated Output (HP)	1
R.P.M.	1750
Armature Volts	180
Armature Amps	5
Field Volts	
Field Amps	
Rating - Duty	40C AMB-CONT
Form Factor	1.5

General Characteristics	
Armature Resistance @ 25ºC	1.9971 Ω

Load Characteristics at 180 Armature Volts

Load Point	**1**	**2**	**3**	**4**	**5**	**6**	**7**
Armature Amps	0.23	1.41	2.52	3.66	4.83	7.05	9.26
R.P.M.	1870	1829	1794	1755	1720	1643	1590
Torque (LB-FT)	0	0.75	1.51	2.26	3.05	4.55	6.03

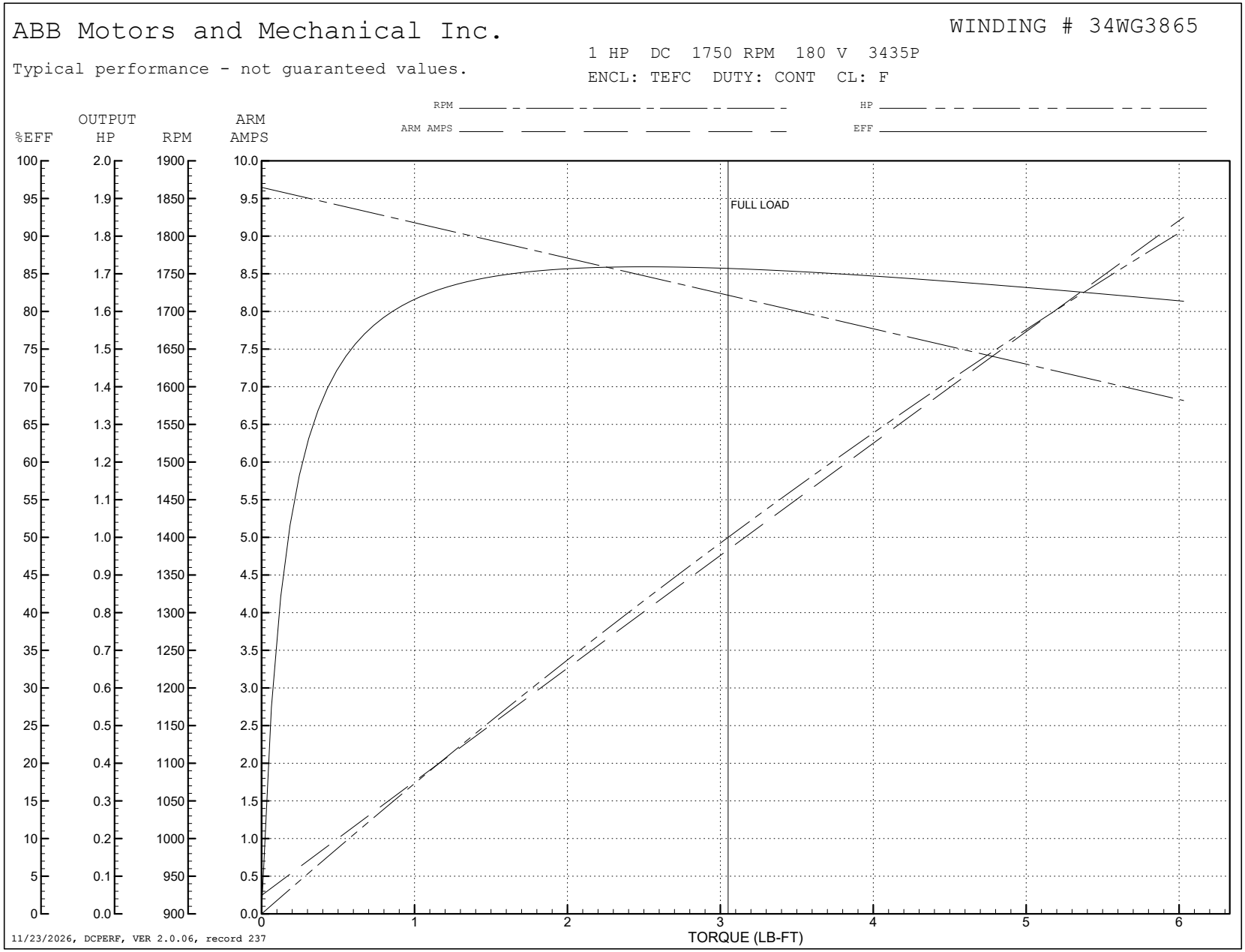
ABB Motors and Mechanical Inc.
WINDING # 34WG3865
Typical performance - not guaranteed values.
1 HP DC 1750 RPM 180 V 3435P
ENCL: TEFC DUTY: CONT CL: F
RPM
ARM AMPS
HP
EFF
%EFF
OUTPUT HP
RPM
ARM AMPS
FULL LOAD
TORQUE (LB-FT)
11/23/2026, DCPERF, VER 2.0.06, record 237

34LY5990

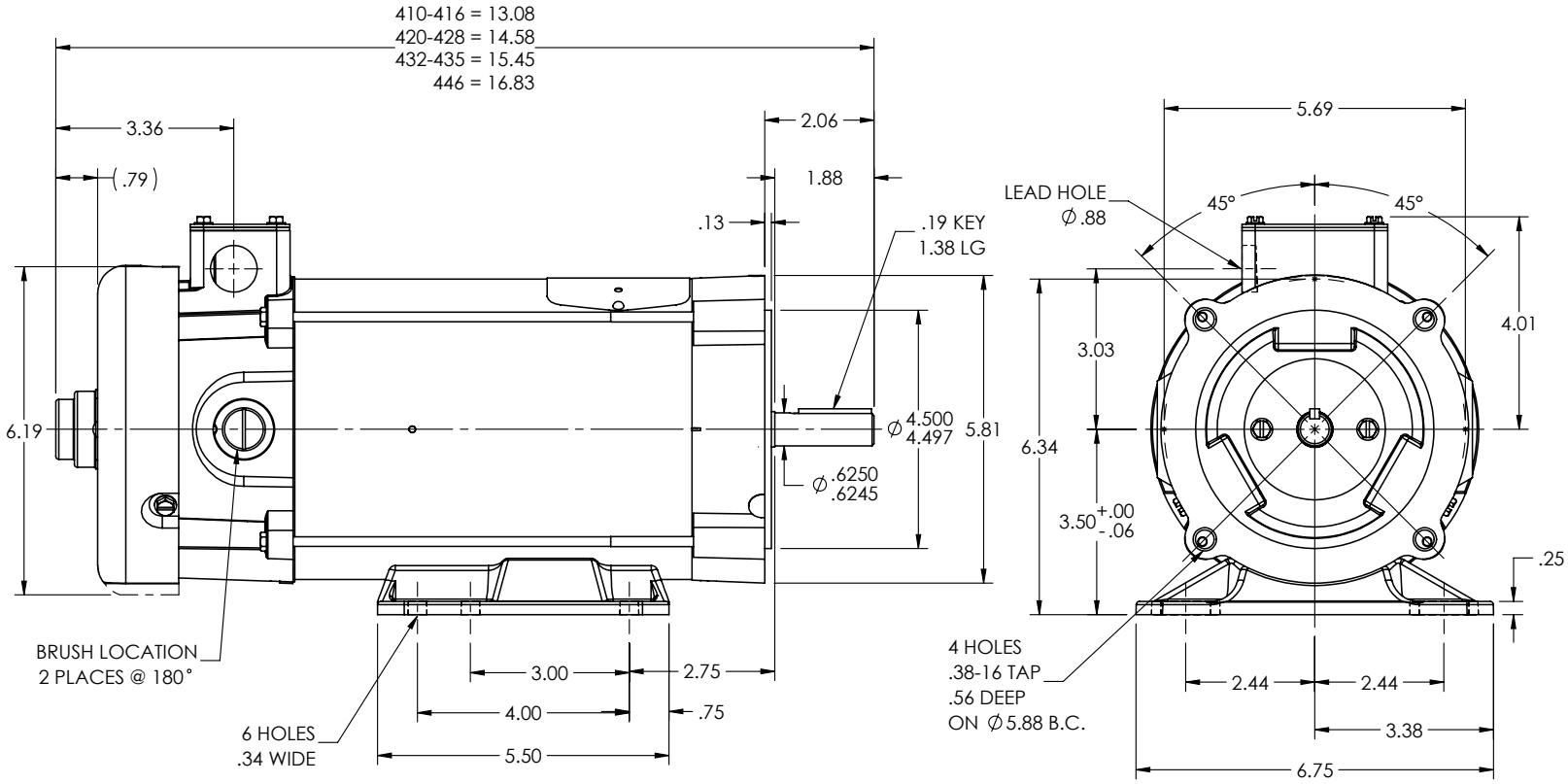

34LY5990

CUSTOMER IS RESPONSIBLE FOR DETERMINING THAT THE PRODUCT WILL PERFORM SUITABLY IN THE INTENDED APPLICATION

REV. DESC: LOAD TO SOLIDWORKS - REV M			
REV: N	VERSION: 02	REVISED: 04:26:06 12/21/2022	TDR: 000001201165
34LY5990	MODEL NO. 34LY5990		REF: -
	BY: ENFRAJ0		

BALDOR - RELIANCE®

SPL HORZ "C" 34PM NEMA 56C TEFC W/M.F.T.K.

CD0194

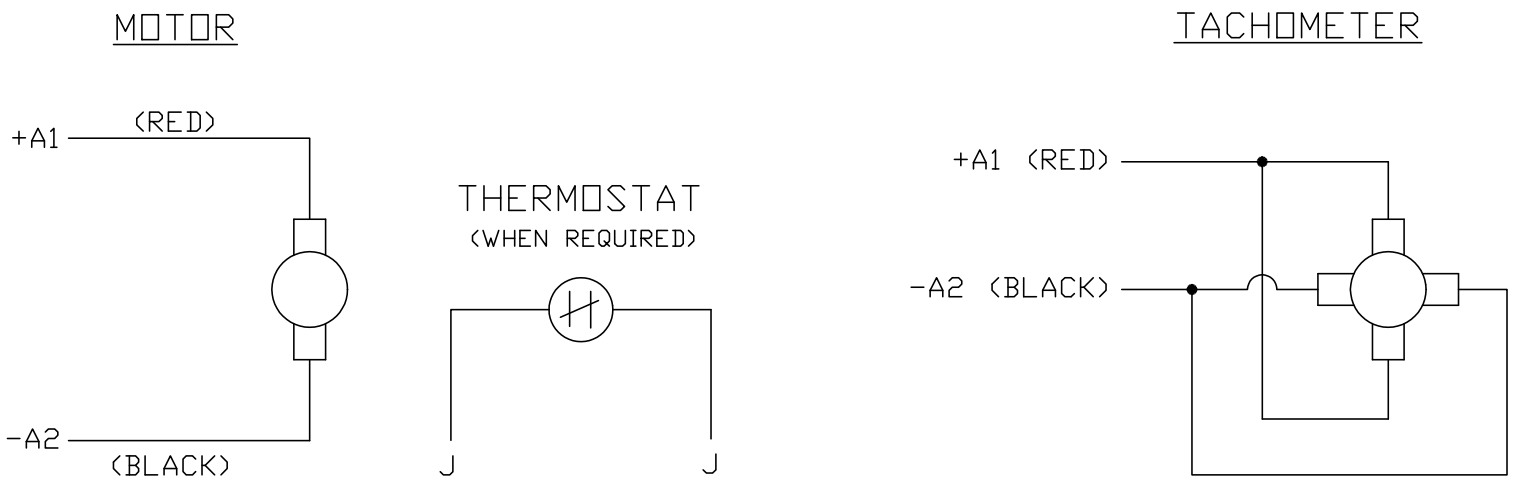

NOTES:

1. CCW ROTATION AS SHOWN FACING COMMUTATOR END. TO REVERSE MOTOR ROTATION OR TACHOMETER OUTPUT POLARITY INTERCHANGE LEADS A1(RED) & A2(BLACK)

2. LEAD COLORS FOR REFERENCE ONLY & NOT SPECIFIED BY THIS DRAWING. LEAD COLORS SPECIFIED BY LAYOUT DRAWING & BILL OF MATERIAL ONLY.

CD0194

MATL: –				BALDOR ELECTRIC Co.
REV: E	ADDED NOTE "LEAD COLORS FOR REFERENCE ONLY &....			
CD0194	SCALE: –	BY: CK	REVISED: 07/28/95	CD TYPE P DC PERMANENT MAGNET MOTORS AND TACHOMETERS
	FILE: AAA00004503		TDR: 0078737	